Three - Tooting - Projection Sign - 600 x 660mm

Copyright Spencer Signs Ltd. 2012

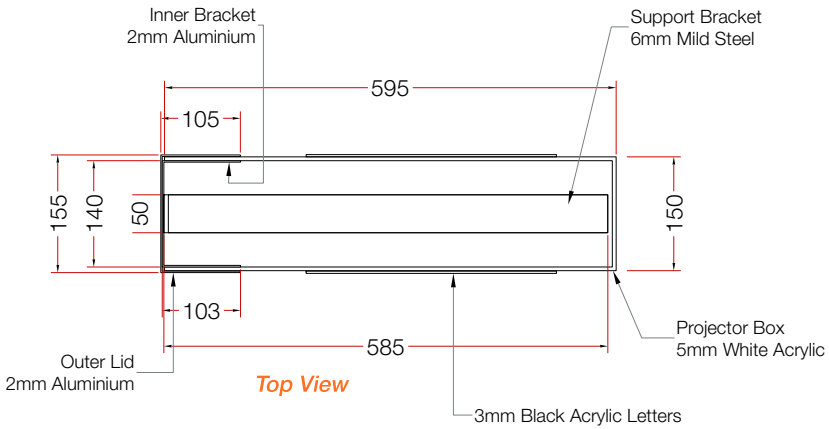

Top View

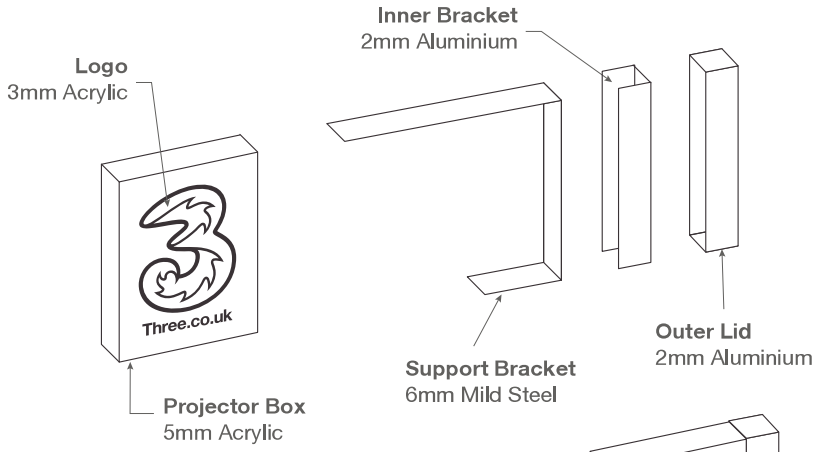

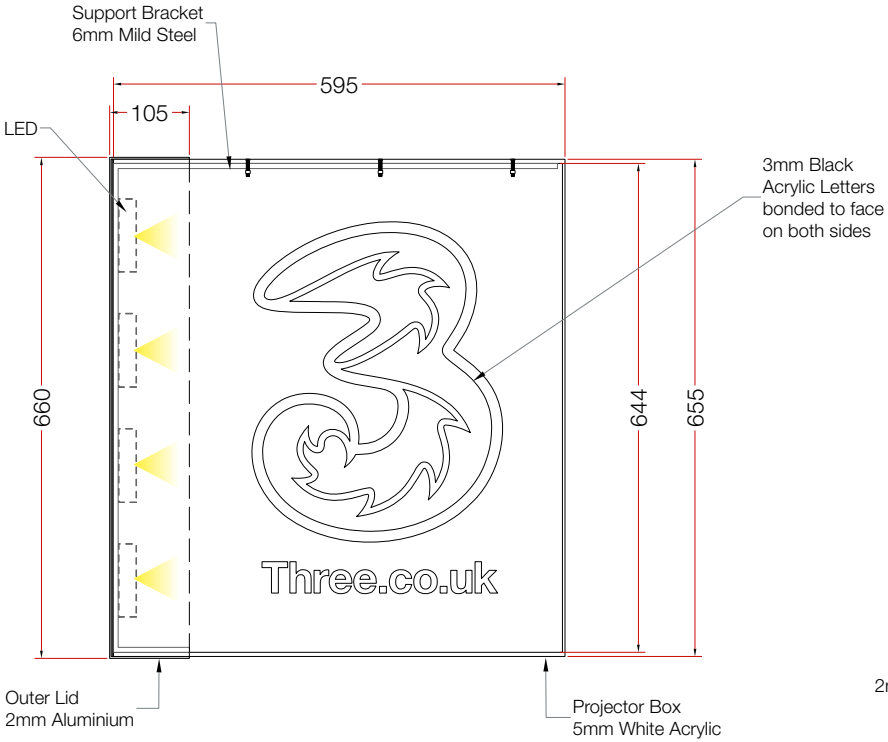

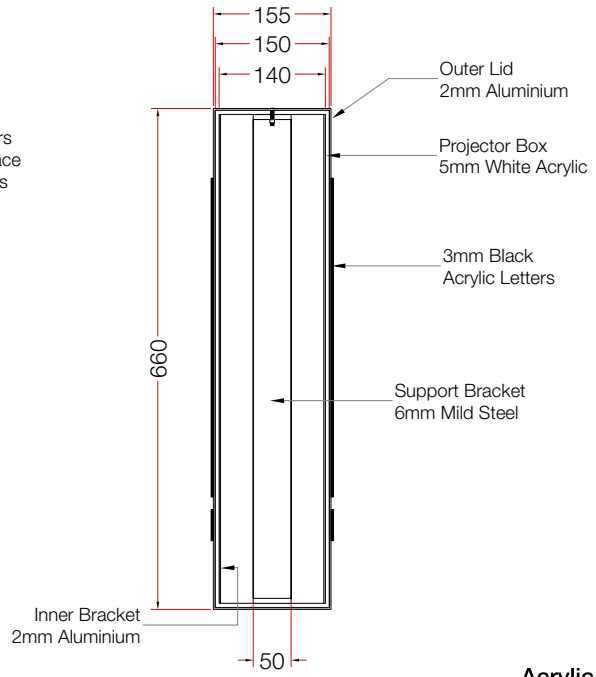

Profile View



Finished Visual

Specification

Projection Sign constructed from a 5mm opal acrylic box with internal LED illumination and 3mm black acrylic logo details bonded to both sides. Supply with all components indicated on drawing.

Components

Completed Overall Size: 600 x 660 mm

Acrylic Box - 595 x 655 x 150 mm (5mm Thick)
Outer Lid - 105 x 660 x 155 mm (2mm Thick)
Inner Lid - 103 x 655 x 140 mm (2mm Thick)
Bracket - 585 x 644 x 50 mm (6mm Thick)
Acrylic Logos - 2no sets @ 330 x 490 mm (3mm Thick)

SPENCER SIGNS
Unit 1, 70 Scarborough St.,
Hull, HU3 4TG
Tel. 01482 325797
www.spencersigns.co.uk
email: design@spencersigns.co.uk

Client: Three
Project: Tooting Projection Sign
Date: 20/09/2012

DRG. NO. 55134
Drawn By: C Wallis
Scale: 1:10 @ A4
Drawing Status: Production

Rev.	Date	Initial	Revision Detail

NOTES

Specification checked and approved for Production By

Installation Notes
The construction shown on this drawing is standard. Please assess that the specification is suitable for the site before installing and inform the Project Manager of any issues immediately, prior to starting the installation.

Production Notes
Production Files in F Folder
Please check all artwork prior to producing and advise the drawing office of any errors prior to starting the job.

Typefaces: N/a

Colours: White, Black

This Drawing & information contained may not be copied or used without prior consent from Spencer Signs. Colour shown may not accurately match any colour references. Sizes in mm unless stated otherwise.