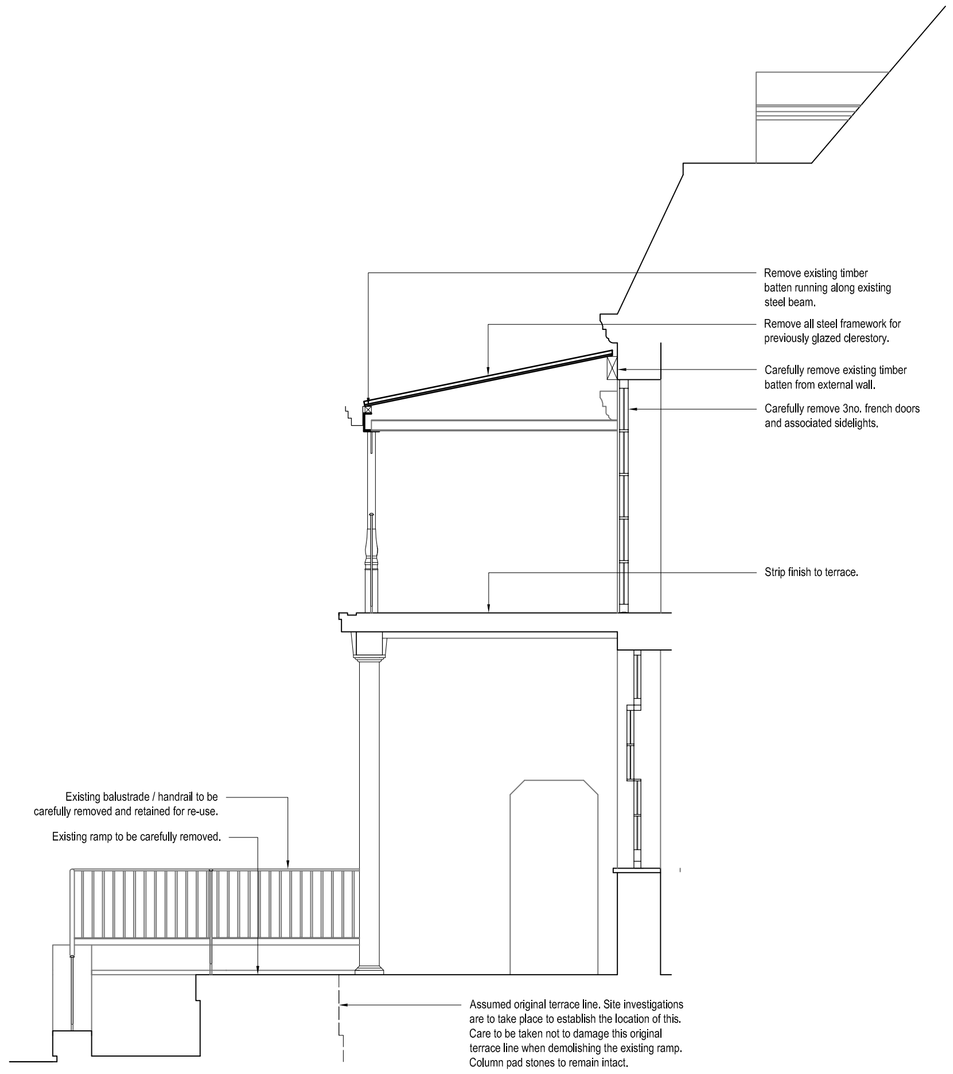

SECTION A-A - AS EXISTING / STRIP OUT

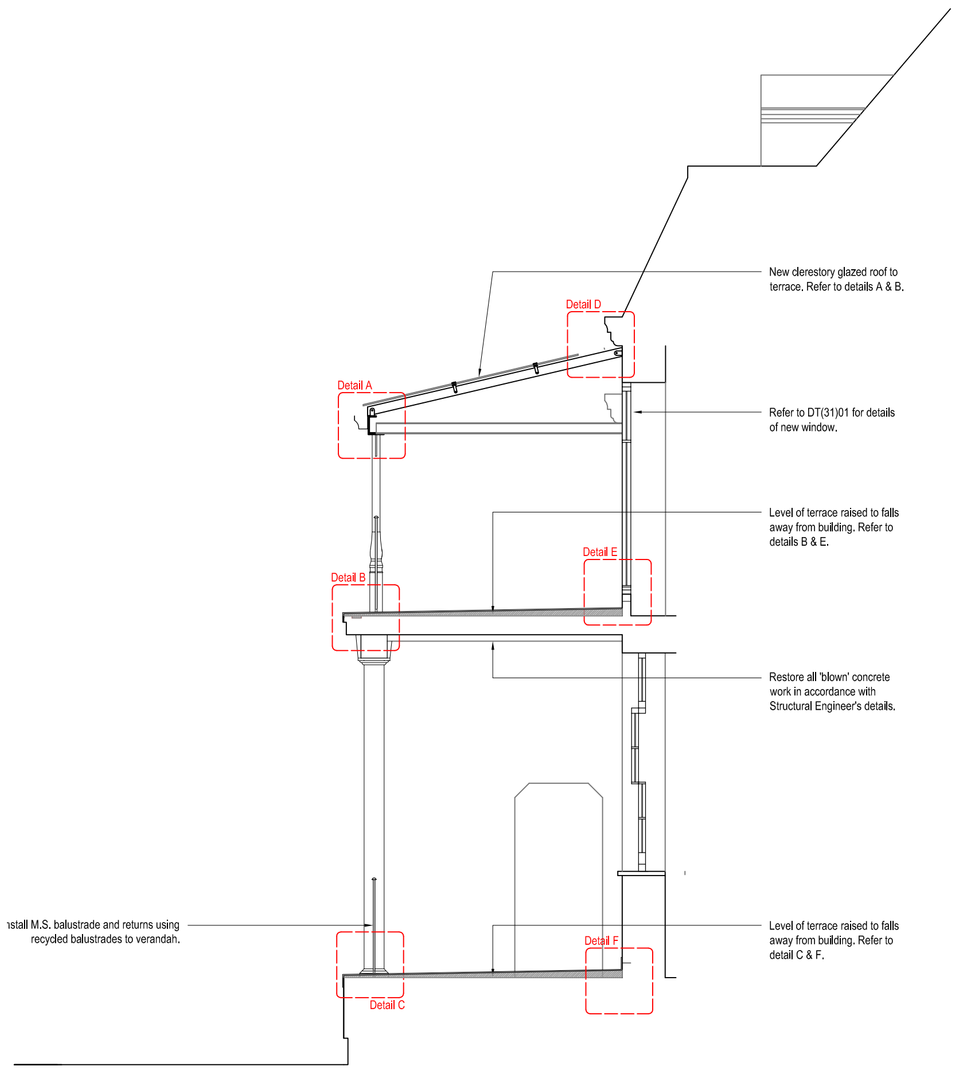

SECTION A-A - AS PROPOSED

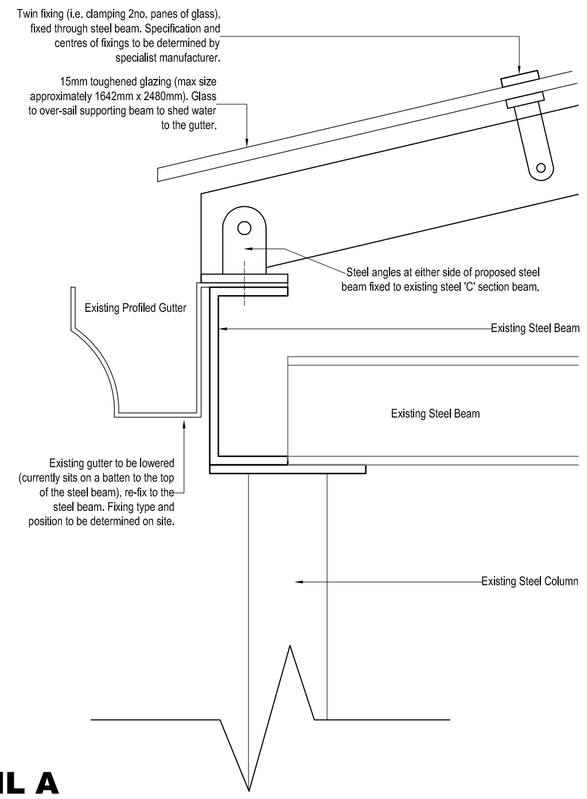

DETAIL A

Preliminary indicative detail - Specialist manufacturer to provide shop drawings for approval.

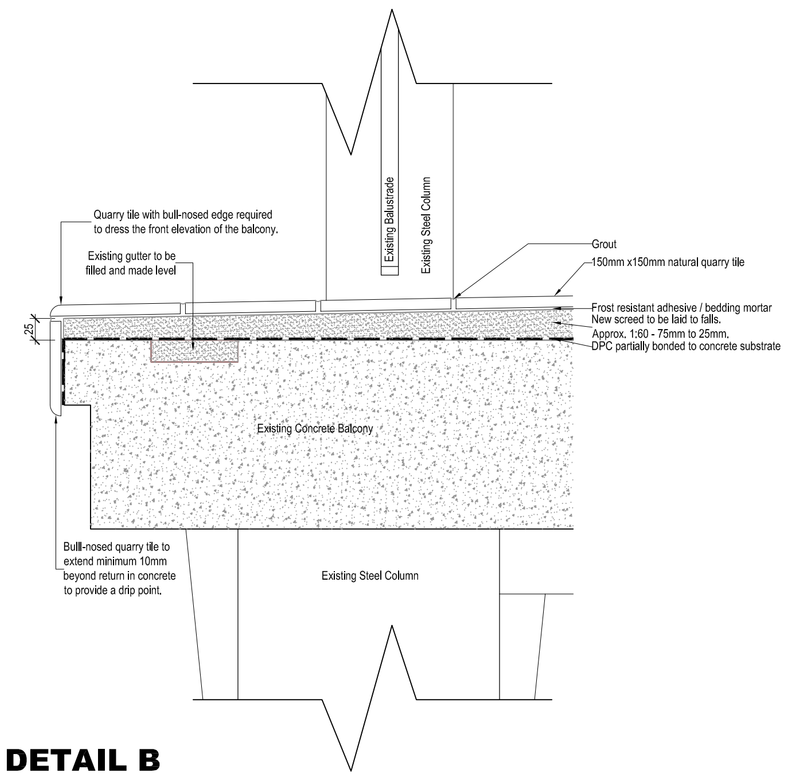

DETAIL B

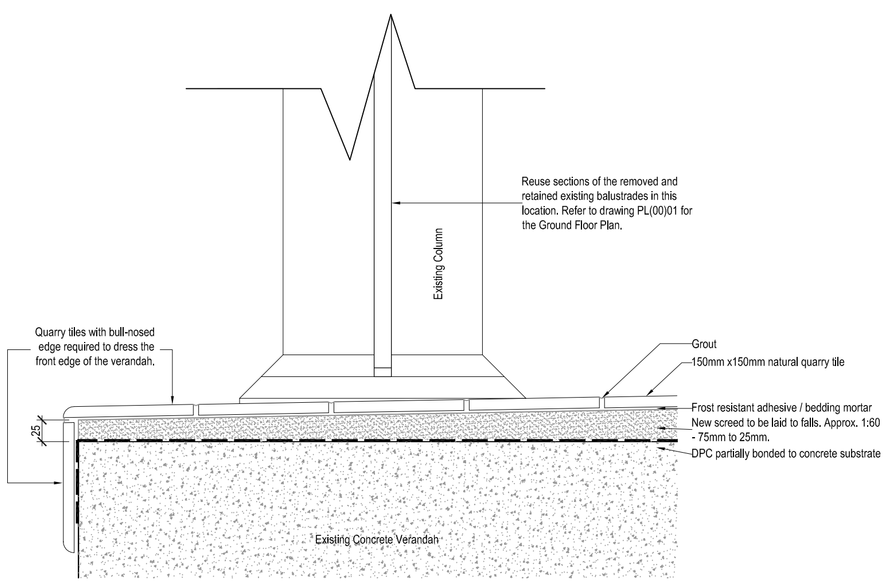

DETAIL C

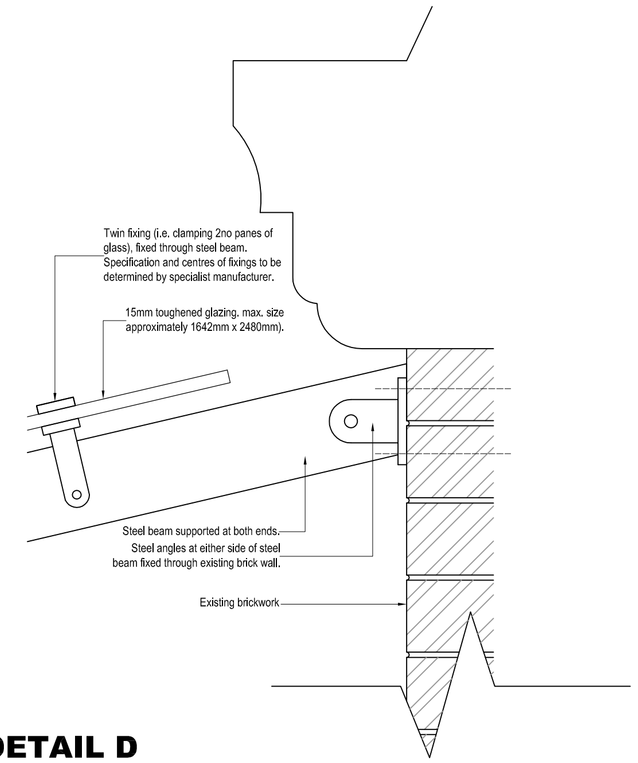

DETAIL D

Preliminary indicative detail - Specialist manufacturer to provide shop drawings for approval.

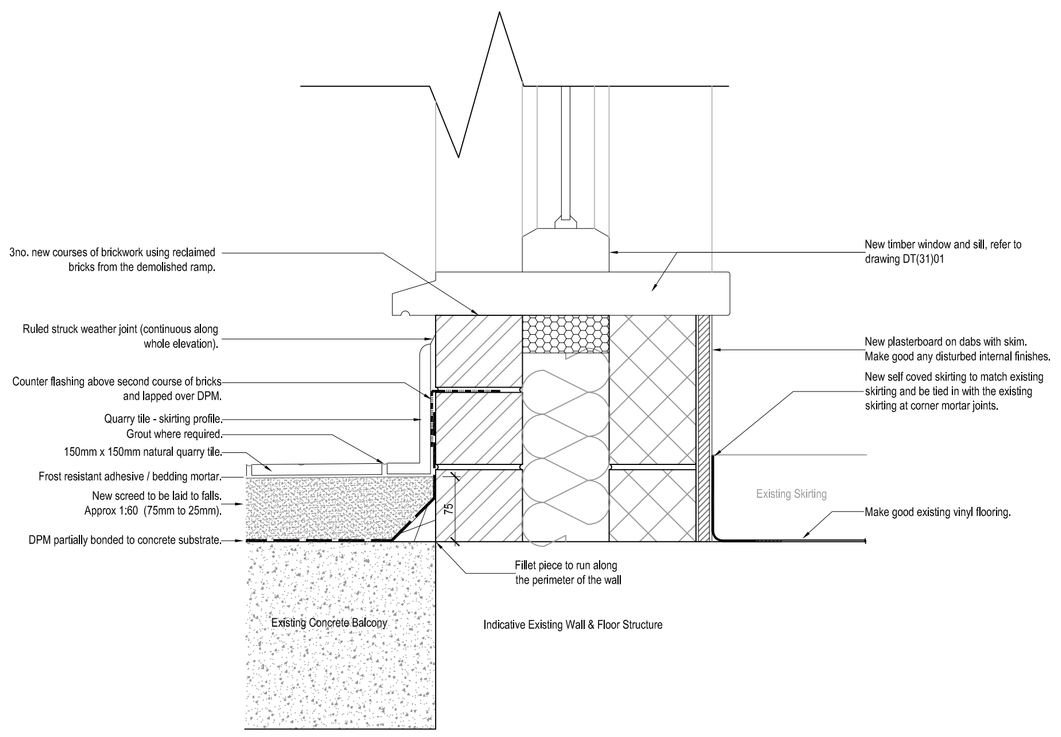

DETAIL E

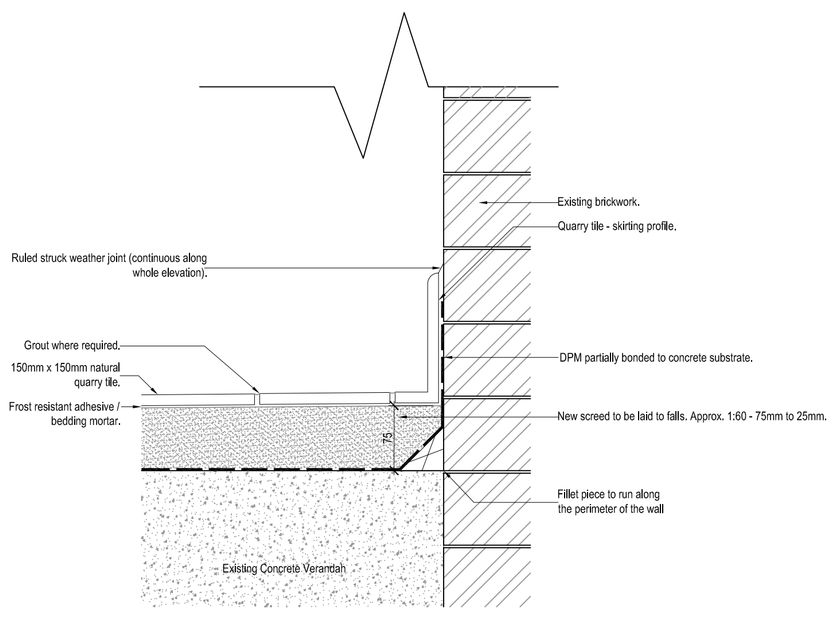

DETAIL F

NOTES:

1) UNDER NO CIRCUMSTANCES SHOULD DIMENSIONS BE SCALED FROM THIS DRAWING "IF IN DOUBT ASK"

2) THIS DRAWING IS TO BE READ IN CONJUNCTION WITH ALL OTHER RELEVANT DRAWINGS, ANY DISCREPANCIES, ERRORS OR OMISSIONS TO BE BROUGHT TO THE ATTENTION OF TAYLOR YOUNG.

3) ALL DIMENSIONS TO BE CHECKED BEFORE COMMENCEMENT

4) THIS DRAWING IS THE PROPERTY OF TAYLOR YOUNG AND MUST NOT BE COPIED OR REPRODUCED EITHER IN WHOLE OR IN PART WITHOUT WRITTEN PERMISSION

drawing originated by: ELR — date: 05/01/12

revisions	drawn/reviewed	date
REV _	__/__	__/__/__

PRELIMINARY

ST MARY'S REFURBISHMENT
FACADE WORKS

Existing & Proposed Sections with Details

Scale: 1:50 @ A1
Reviewed by : NS

job	drawing	rev
5769	SE(00)01	_

taylor young|ty
chadsworth house
wilmslow road
handforth
cheshire
sk9 3hp

tel: 01625 542 200
fax: 01625 542 250
mail@tayloryoung.co.uk
www.tayloryoung.co.uk

architecture
graphics
healthcare planning
interior design
landscape architecture
regeneration
town planning
urban design
3D visualisation