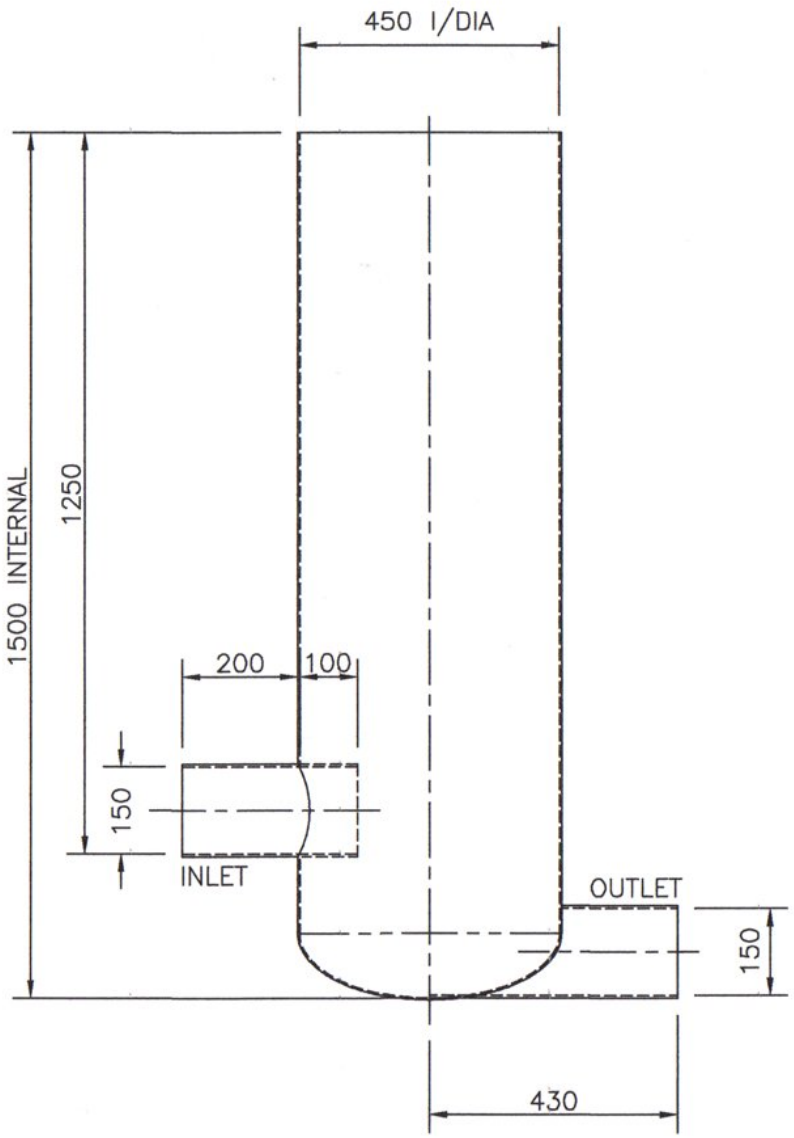

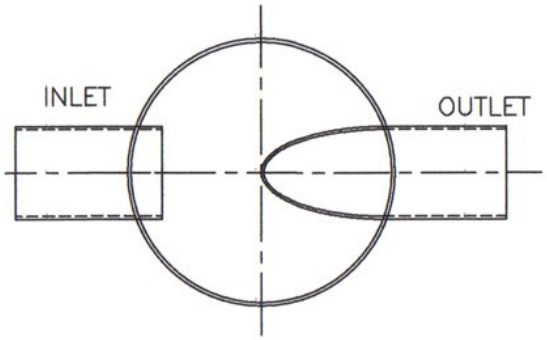

MATERIAL : 450 CSM CONSTRUCTION (33% GLASS).

OVERLAY PIPEWORK TO SHELL USING 3 LAYERS 450 CSM 150 WIDE

IMPORTANT NOTE – WALL THICKNESS TO BE A MIN. OF 6mm

PIPEWORK – 150 NB DRAINAGE PIPE.

separatorsplus.com
making sense of water and treatment
Tel: Lo-call 0845 600 3572
Riverside
Newbridge Industrial Estate
Pitt Street
Keighley, West Yorkshire
BD21 4PQ, United Kingdom

REV.	DATE	BY	CHKD.	APPD.	DESCRIPTION
1	17.10.05	R.U.	I.W.	CPG	ISSUED FOR MANUFACTURE

TITLE: 450 DIA x 1250 Lg SAMPLING CHAMBER – 160 PIPEWORK

DRAWN BY	CHKD.	APPD.	SCALE	DRAWING No.	REVISION
R.U.	I.W.	CPG	1:10	SP/GA.1170	1
DATE 17.10.05	DATE 17.10.05	DATE 17.10.05			

A3

DO NOT SCALE
IF IN DOUBT ASK
ALL DIMENSIONS IN MM

TOLERANCES (unless noted otherwise)
GENERAL LINEAR DIMS : +/– 2mm
ANGULAR DIMENSIONS : +/– 1/2°

This drawing is sent in confidence and must not be copied, used or disclosed to third parties without our written permission.