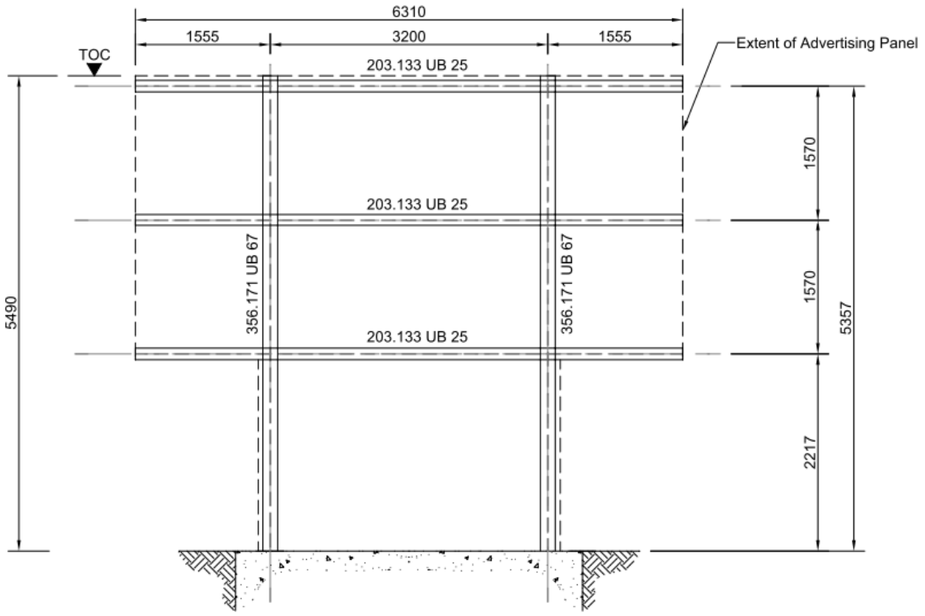

Main Steelwork Elevation

Scale 1:50

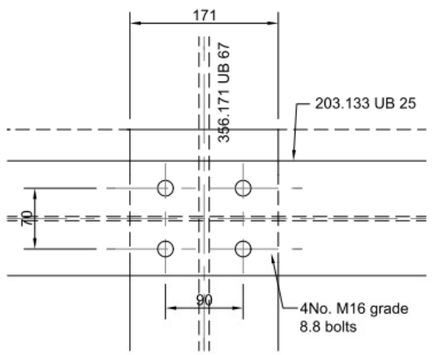

Elevation

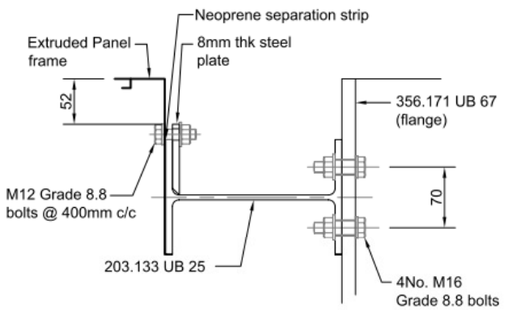

Panel Fixing Detail (Top)

Panel Fixing Detail (Top)

Scale 1:5

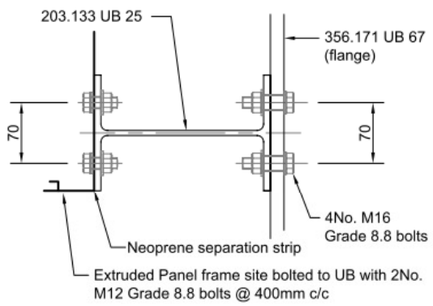

Panel Fixing Detail (Bottom)

Scale 1:5

1. General

a. This drawing is to be read in conjunction with all other Engineer's, and Specialist's Drawings, Bills of Quantities and Contract Documents.

b. The Contractor shall be solely responsible for the design and construction of all the temporary works propping and shoring.

c. The Contractor shall inform the Engineer immediately of any variations in the existing construction and that noted on drawings.

d. All work is to comply with all relevant Heath and Safety legislation and regulations.

e. All dimensions are shown in millimetres unless noted otherwise.

f. All dimensions are to be checked on site by the Contractor prior to construction.

2. Steelwork

a. Steelwork shall be cleaned to Swedish Standard DA 2.5 and galvanised to BS EN ISO 1461. All bolts to be grade 8.8 sherardised or spun galvanised unless noted otherwise.

b. All steelwork is to be grade S275 to the latest revision of BS EN 6025.

c. The steelwork fabricator shall supply all holding down bolts and anchorage materials to the main contractor at a time mutually acceptable for the completion of the substructure programme.

d. The contractor shall be responsible for the accuracy of all dimensions and for correct setting out on site. Setting out workmanship is to comply with BS 5606:1990.

e. After steelwork is plumbed and levelled, the main contractor is to grout up the holding down bolts and spaces beneath base plates.

f. Separating membranes shall be employed between all dissimilar metals which may be subject to bi-metal corrosion (e.g neoprene washers at stainless steel and mild steel interfaces).

3. Welds

a. All welds to be electrode classification 35 to BS EN 449 and 440. Refer to details for leg lengths.

b. All welds to be continuous, 20% of welds at base of column to have ultrasonic testing.

JOB REF: MCL/2013.0034/SN1057
Sheet Size—A.3

Rev	Description	Date
A	Beam setting out	21.01.13

MediaCo Outdoor Ltd

48 Sheet Panel Manchester
City Centre Signs

Steelwork General Arrangement
and Details

Scale: As Shown @ A2

Drawn	Checked	Approved
JN	AB	AB

S&W DESIGN
Aspect House . Manchester Road . Altrincham
Cheshire . WA14 5PG
t: +44 0 161 926 6000
f: +44 0 161 926 6001

S&W Design
Aspect House
WA14 5PG
Tel. 0161 926 6000
Fax. 0161 926 6001

Drawing Number: D9841-S-02

Date: 17.01.13

Rev.: A