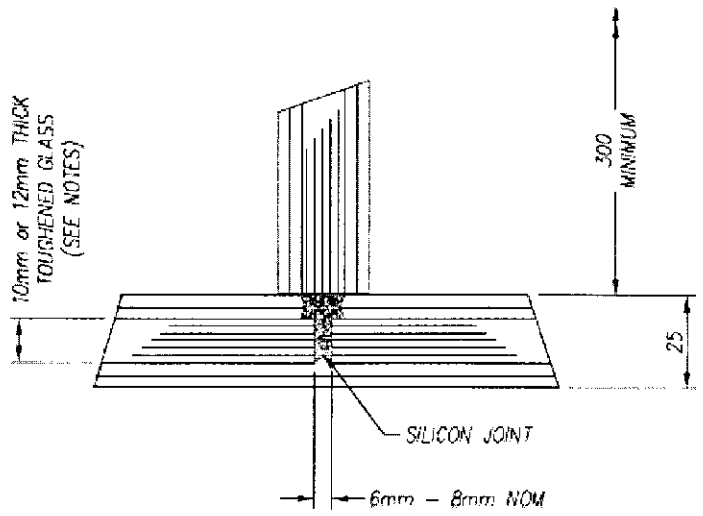

Cross Section of Glazing with Silicon Joint

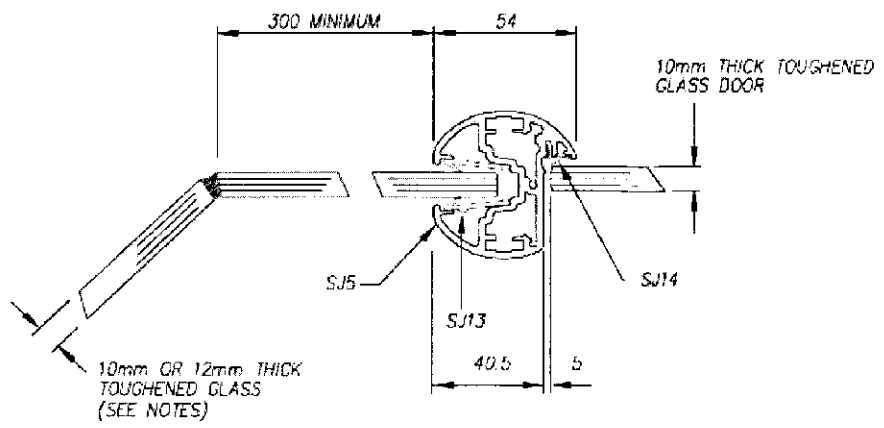

Door Frame of Glazing with 270' Angle @ Branch Secretaries Door

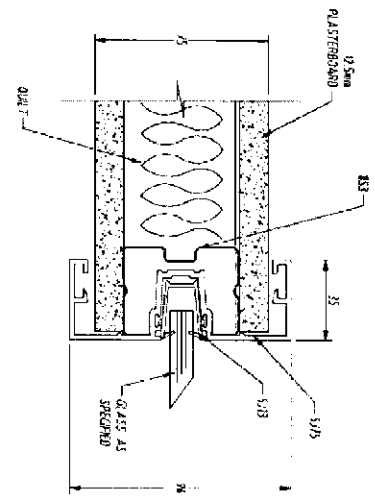

Glazing Attached to Studwork Downstand

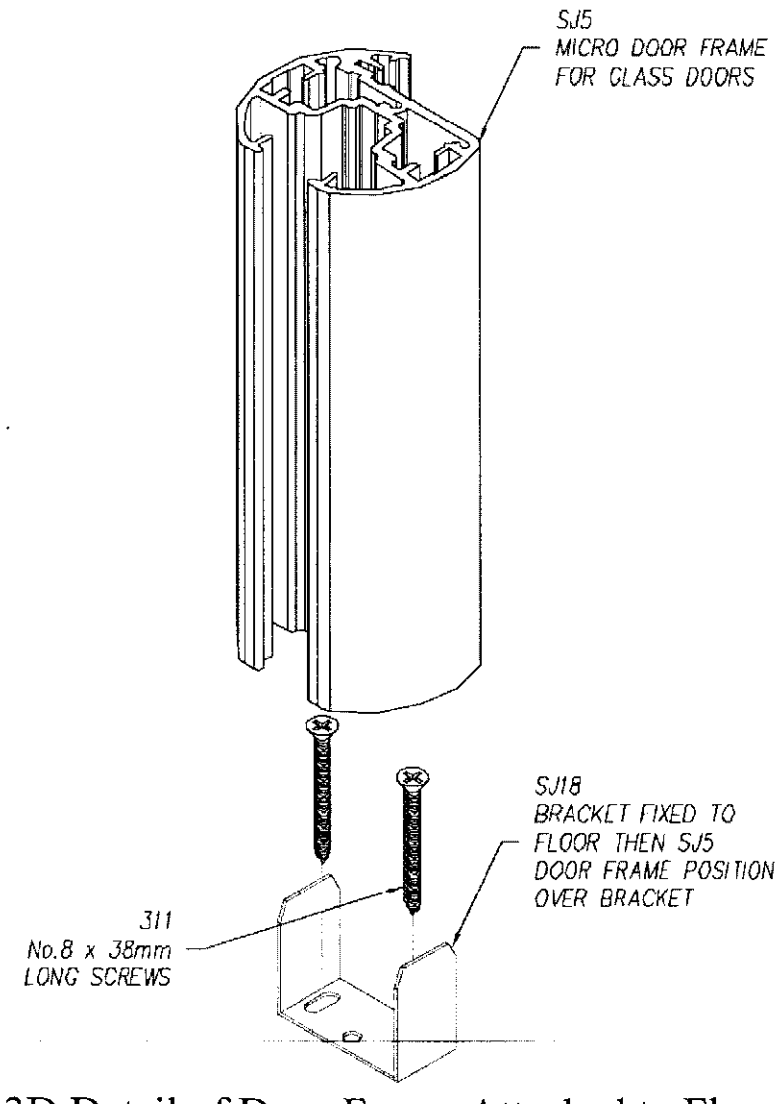

3D Detail of Door Frame Attached to Floor

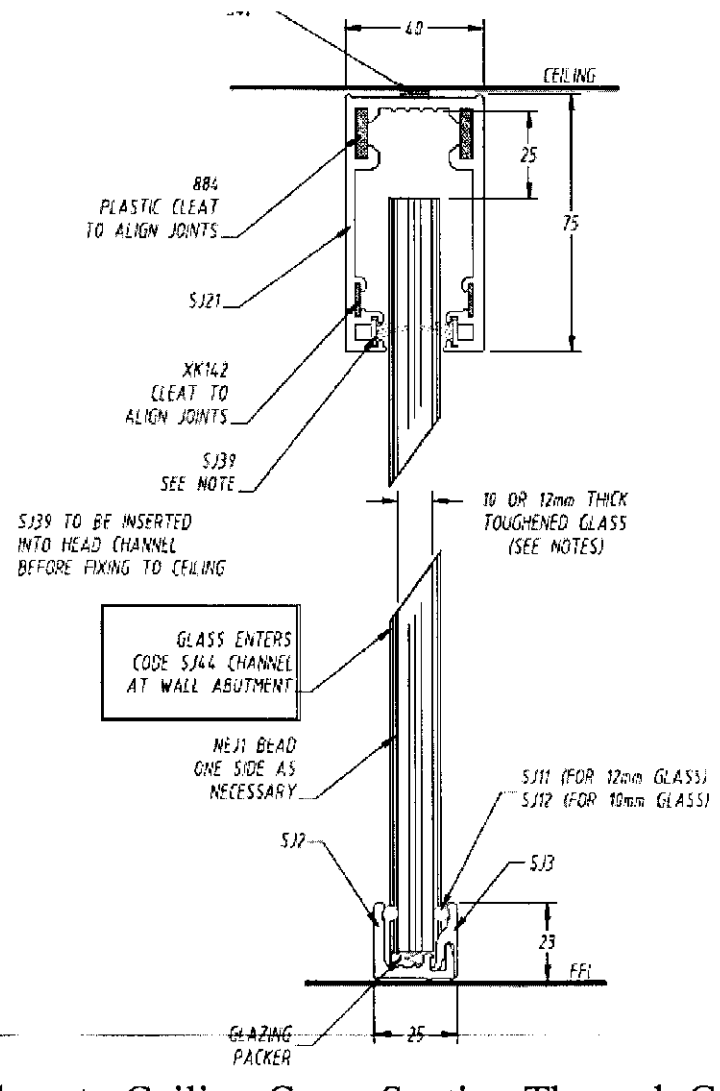

Floor to Ceiling Cross Section Through Glazing

Various Details of Polar Glazing

SCALE : NTC

Do not scale from this drawing

All dimensions to be checked on site

Notes:

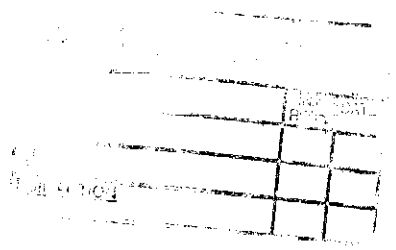

Amendments:

Drawing type: Details

Client: UNISON

Project: 6th Floor Sunlight House
Office Fit Out Works

Title: Various Details of
Polar SG Glazing

Scale: NTC Date: March 08

Drawn: J.Ross Checked: SWW

Drg.no: 105690_JR_008 Rev:

Watts.

Watts Group PLC
60 Fountain Street
Manchester M2 2FE

T: +44 (0)161 831 6180
F: +44 (0)161 834 7750

W: Watts-international.com

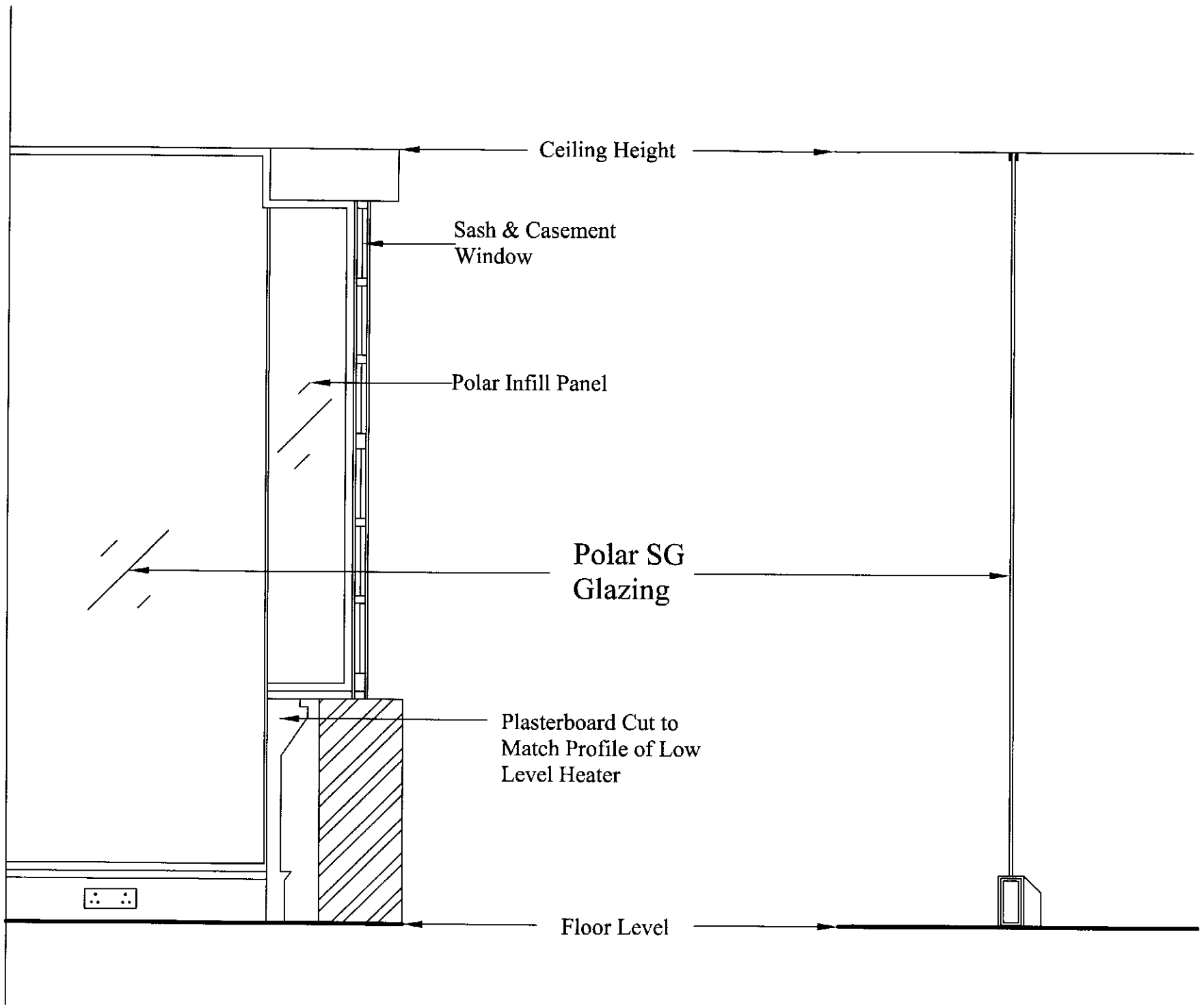

DETAIL A
Polar SG Abutts Window Frame

SECTION A - A
Through Polar SG with Glazed Infill to Cornicing Detail

Polar SG Section and Elevation

SCALE 1 : 20

Do not scale from this drawing

All dimensions to be checked on site

Notes:

PLANNING
ACK'D
REPLIED
RECD 14 MAR 2008

Amendments:

This drawing and the copyrights and patents therein are the property of Watts Group Plc and may not be used or reproduced without prior consent.

This drawing is to be read in conjunction with all relevant Consultant's and / or specialist's drawings and documents. Any discrepancies or variations are to be notified to Watts Group Plc before the affected work commences.

Works to be carried out in accordance with Bye Laws and Regulations of Local Authorities and Statutory Undertakers.

Drawing type: Elevation and Section

Client: UNISON

Project: 6th Floor Sunlight House Office Fit Out Works

Title: Detail and Section Polar SG Abutting Window and Cill

Scale: 1/20 Date: March 2008

Drawn: J.Ross Checked: SWW

Drg.no: 105690_JR_007 Rev:

Watts.

Watts Group PLC
60 Fountain Street
Manchester M2 2FE

T: +44 (0)161 831 6180
F: +44 (0)161 834 7750

W: Watts-international.com