FENCING NOTE

Fence panels to be designed in same style as gate side panels, attached to post by welded bracket security bolted (using shear nuts) through to matching bracket welded to post. Posts to be same Spec. as gate posts. Fence panels over 1500mm length to be supported by 50x10mm central supporting lug welded to bottom member and installed in concrete foundations.

No fence panel to exceed 2750mm width unless stated otherwise on the elevation drawings.

Ref.094950. 2 Wilpshire Avenue

To the Side of 2 Wilpshire Avenue

Metal Railings on Wall - 700h x 2800w
Height of Wall - 1700h

Detail 6

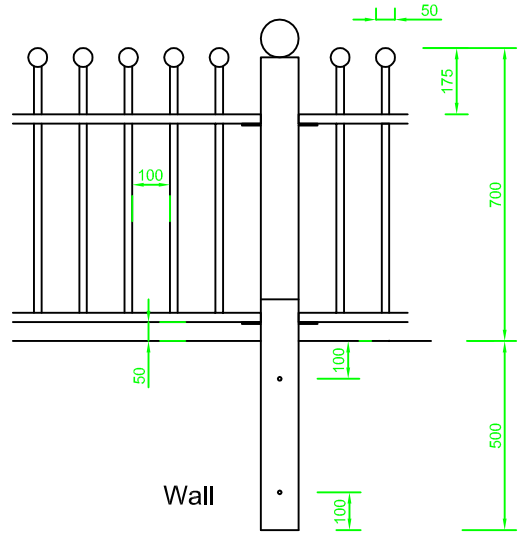

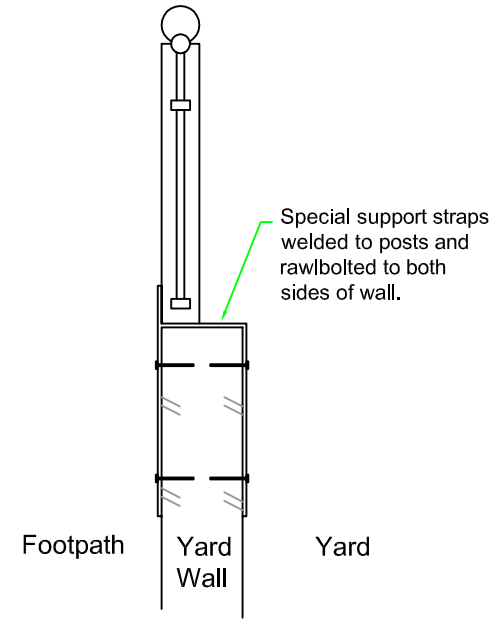

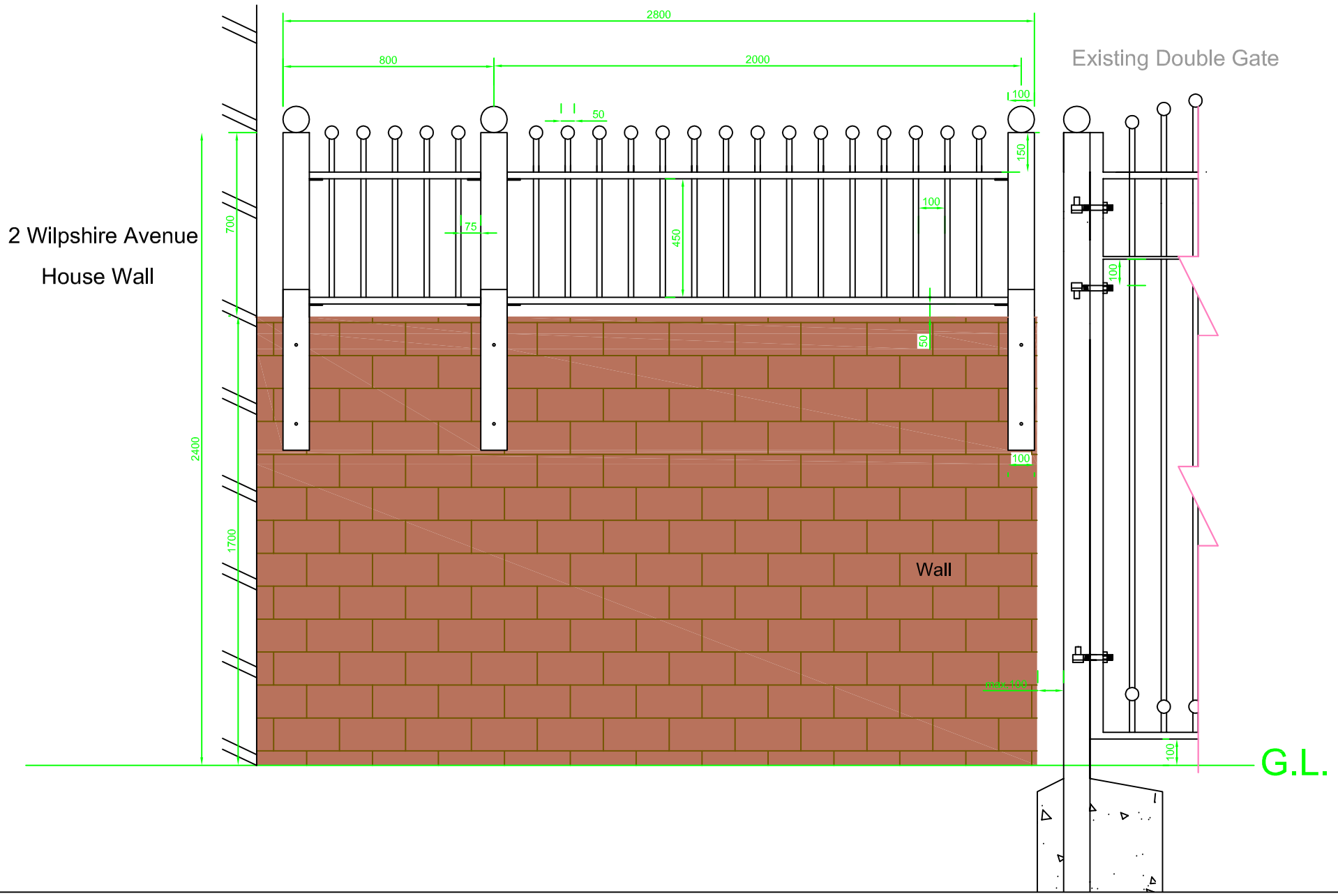

NOTES

1. WELDING:
All welds to be continuous seam or fillet welds. Any irregularities to be ground down prior to galvanising.

2. GALVANISING:
All fabricated steelwork to be hot-dip galvanised to BS 1461.

All steel surface shall be free of any slag, spatter or grease.

3. PAINTING:
All galvanised surfaces to be degreased using Dacrylate Thinner 'R5'. The material shall then be treated with Dacrylate Mordant Solution (T Wash) and then painted without delay with the following system:

Dacrylate Vinadac HB MIO, ref: 41-line, to an approximate wet film thickness of 190 microns to achieve a dry film thickness of 75 microns
(Colour: 41-177 (Matt Black)).

4. The Contractor should satisfy himself to the accuracy of all measurements shown in relation to existing features.

NOTE: These gates have been designed in consultation with 'Crime and Disorder' team.

SITE:
Alleyway Security Contracts

TITLE:
Metal Railings on Wall

DWG No.	SCALE:	DATE:
Ref.094950/AG16.2.8.1	Print: A3-1:20	11.02.09

Northwards Property Services
Parkside Office
Sheepfoot Lane
Prestwich
Manchester
M25 0BW
Tel: 0161 741 2799
Fax: 0161 741 2700

Northwards Housing
North Manchester's Council Homes