11/1019 : VM Withington T1530

For : UpNorth Group (Virgin Media Ltd.)

Revision : First Issue 24th July 2013

Design & Access Statement

NAPPER
ArchitectureDesignLandscape



Contents

1.0 Background information

2.0 Location, constraints and context

3.0 The Proposals

- 3.1 Amount
- 3.2 Layout
- 3.3 Scale
- 3.4 Appearance
- 3.5 Access
- 3.6 Planning : guidance data

4.0 Appendices

- 4.1 Napper Architects drawing AL(0)01 Location Plan
- 4.2 Napper Architects drawing AL(0)02 Plan as existing
- 4.3 Napper Architects drawing AL(0)03 Plan as proposed
- 4.4 Napper Architects drawing AL(0)04 Elevations as existing
- 4.5 Napper Architects drawing AL(0)05 Elevations as proposed
- 4.6 Uniflair : MRA0611 fabrication drawing
- 4.7 Uniflair : MRA0611 Condenser / UCF0481 Cassette technical data
- 4.8 Uniflair : MRA0611 Condenser technical / sound data
- 4.9 Uniflair : UCF0481 Cassette technical / sound data

1.0 Background Information

UpNorth Group commissioned Napper Architects to submit applications for planning approval for the alteration and / or adaption of a number of Virgin Media 'hubs' nationwide, to provide air handling equipment to serve new VM digital media apparatus.

The Virgin Media premises is accessed directly from Barlow Moor Road (A5145) :

VM Withington T1530 Barlow Moor Road Withington Manchester Lancashire M21 7GL

2.0 Location, constraints and context

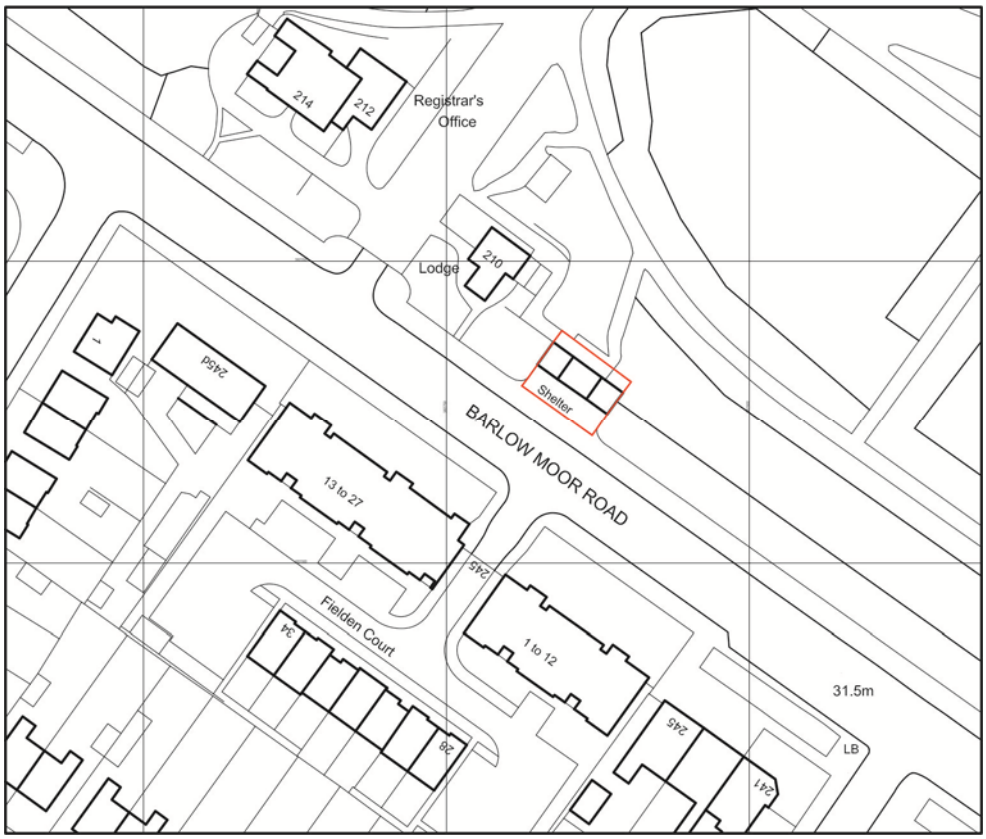

Figure 1.
Site location plan not to scale

The Virgin Media building is a detached single storey stone premises, previously housing public toilets serving the cemetery to the north. The building sits beyond a private parking apron accessing directly onto the highway and incorporates stone flanking garden walls that link with the stone walling and ornamental railings to the perimeter of the cemetery. The building walls are natural stone with carved window mullions and door surrounds, with a pitched / hipped slate roof with clay ornamental ridge and hip tiles.

The proposals comprise the installation of new ceiling mounted AC supply cassettes within the building, with piped connection to three new external condensing units; these to be located within a bespoke acoustic enclosure incorporating proprietary acoustic louvres, sealed to a powder coated steel casing mounted abutting the north facade. The new condensers to replace two existing wall mounted condensers – refer to view 4.



Figure 2.
Google Earth view of the site.

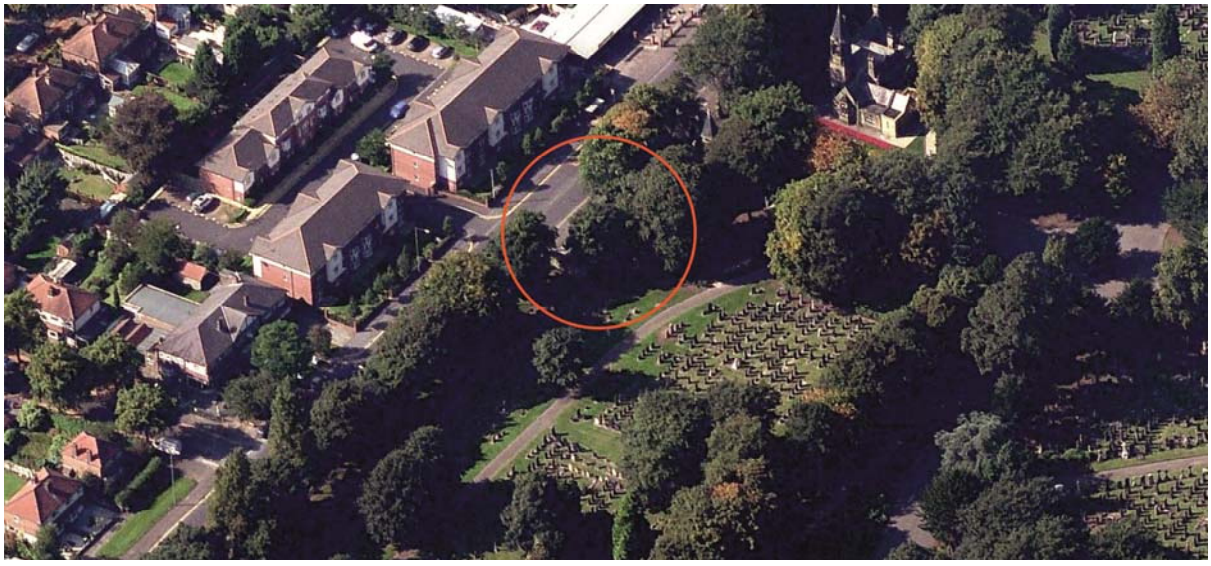

View 1.
Aerial view of the Virgin Media premises from the east.

3.0 The Proposals

The proposals which form this submission build on the evolving client brief and the technical analysis noted in the sections below.



View 2.
View of Virgin Media premises from Broom Moor Road showing parking apron and flanking walls connecting to cemetery dwarf wall and railings enclosure.

3.1 Amount

Three prefabricated 'Uniflair' internally located ceiling mounted air conditioning cassette supply units, ref Unisplit UCA0481 (refer to figure 3) incorporating integral fans within a prefabricated powder coated steel casing, connected via insulated pipework to three external condensing units, ref Uniflair Unisplit MRA0611. The external condensers to be housed within a bespoke acoustic enclosure incorporating proprietary acoustic louvres for both supply and exhaust.

The acoustic enclosure is to be mounted tight to the north facade.

New extraction is to be provided via 2 new axial fans fitted to the rear of the existing louvre evident on view 4, and incorporating a refurbished smoke damper. Fresh air intake via existing louvre (refer appendices 4.4) with new filters and motorised damper.



View 3.
Existing condensers mounted on the north facade within 'security cages'.



View 4.
North facade viewed from the north east looking back at the existing extract louvre.

3.2 Layout

The external condensing units are located in a row spaced away from the north facade and are enclosed in an acoustic enclosure running between the electricity substation compound and the existing extract louvre, replacing the two existing 'caged' condensers, refer figure 6.

The existing intake and exhaust louvres are refurbished, fitted with new filters and dampers internally, but are visually unchanged externally.



View 5.
Aerial view from the south

3.3 Scale

These are proprietary units, all sized for performance capacity; the cassettes are located internally, positioned to cool new digital media apparatus, with connection via insulated pipework to the external condensers. Refer to appendices 4.6 for full dimensions.

The condensers are located externally, but are fully enclosed within a bespoke acoustic enclosure; refer to figure 4.



View 6.
Redundant wall mounted condensing units, to be replaced with new units within acoustic enclosure. Railings to the right form the enclosure to the adjacent electricity sub station, unaffected by the works.

3.4 Appearance



Figure 3.
Uniflair ceiling mounted AC supply cassette and single fan external condensing unit.

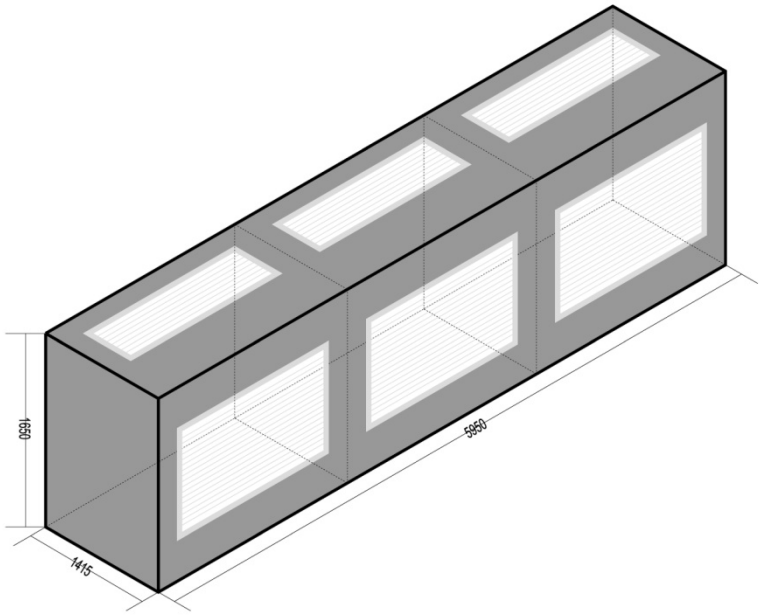

Figure 4.
Bespoke acoustic housing to serve three external condensing units, with acoustic intake / supply louvres mounted in the top and and extract / discharge louvres mounted in the front. The housing incorporates an internal splitter plate to separate intake and exhaust air and extends to 4700mm width.

Only the acoustic enclosure and existing supply and exhaust louvres will be visible externally. The enclosure is a bespoke unit incorporating proprietary inset acoustic louvres. The louvres and casing are proposed to be powder coated to RAL 7042 (Dove Grey) to LPA approval.

The existing louvres are to be refurbished with new filters and motorised dampers fitted internally.



View 7.
Aerial view from the west

3.5 Access

The installations require periodic maintenance, with full access required only during the installation period and for inspection of any damage or major technical faults that occur during operation. Direct access is possible from within the cemetery access.



View 8.
Aerial view from the north

3.6 Planning : guidance data

Refer also to preceding sections 3.1-3.5

A. Site analysis - Virgin Media occupy **Virgin Media Hub, Barlow Moor Road Withington Manchester Lancashire M21 7GL**

The premises comprises a single storey hub building with pitched roof, with rear facade accessible via the cemetery.

B. Context analysis – The proposal is to provide supplementary air cooling plant to serve digital media equipment. No existing access arrangements for either Virgin Media or their neighbours is compromised.

C. Policy Context

D. Movement – No existing access arrangements are compromised by the proposal

E. Access – The Virgin Media premises is accessed directly from Barlow Moor Road, via a private parking apron. Refer also to item 3.5

F. Amount – refer to item 3.1

G. Layout – refer to item 3.2

H. Scale – refer to item 3.3. The proposed acoustic enclosure measures 4700mm (wide) x 1415mm (deep) x 1650mm (high) - refer to figure 4 for full fabrication sizes.

I. Appearance – refer to item 3.4

J. Landscaping – no landscaping is involved in this application

K. Community safety – The proposed plant is located to the rear of the Virgin Media premises within a secure acoustic enclosure to be accessed by only Virgin Media staff and service engineers.

L. Environmental Sustainability – The scheme proposal is to provide a far more efficient element of plant with greater capacity than the equipment it replaces to serve new digital media distribution equipment, whilst adhering to current legislation in terms of performance output.

Final scheme - As application drawings

4.0 Appendices

4.1 Napper Architects drawing AL(0)01 Location Plan

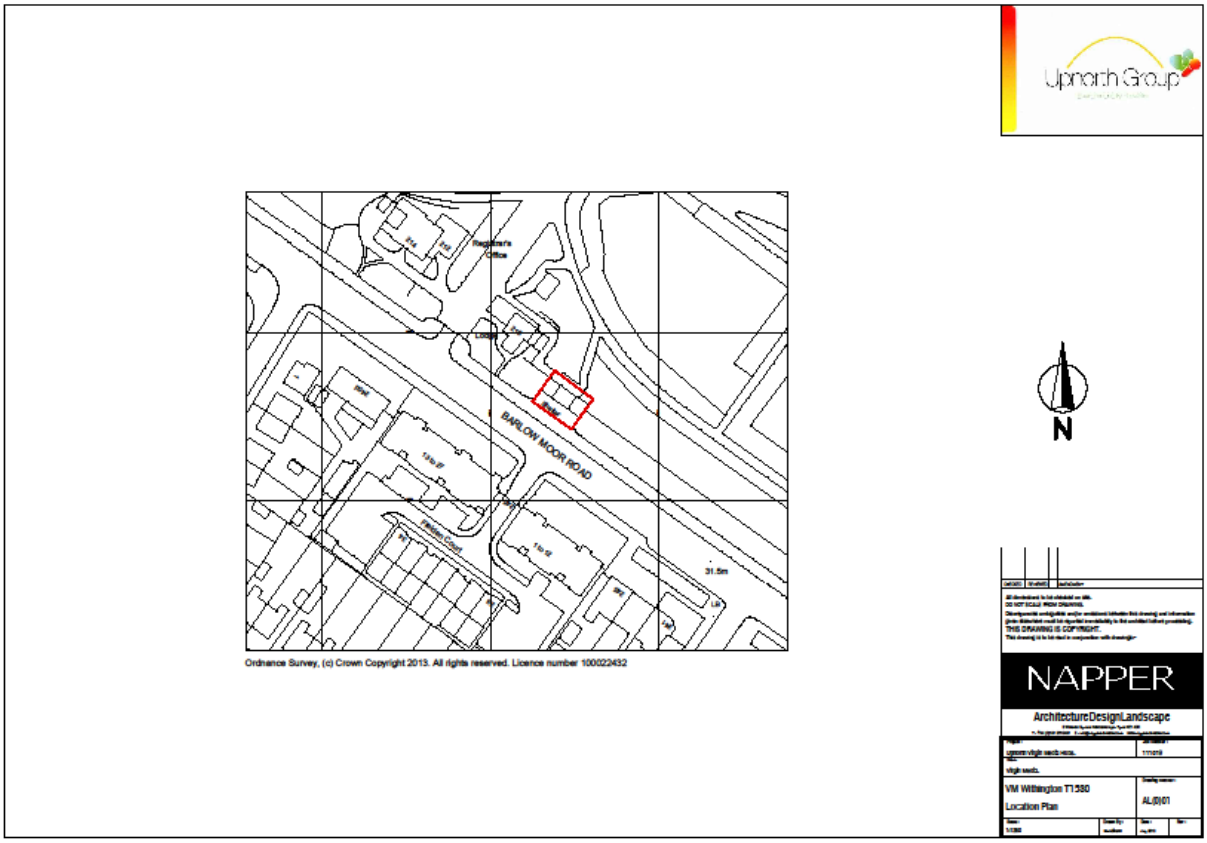

4.2 Napper Architects drawing AL(0)02 Plan as existing

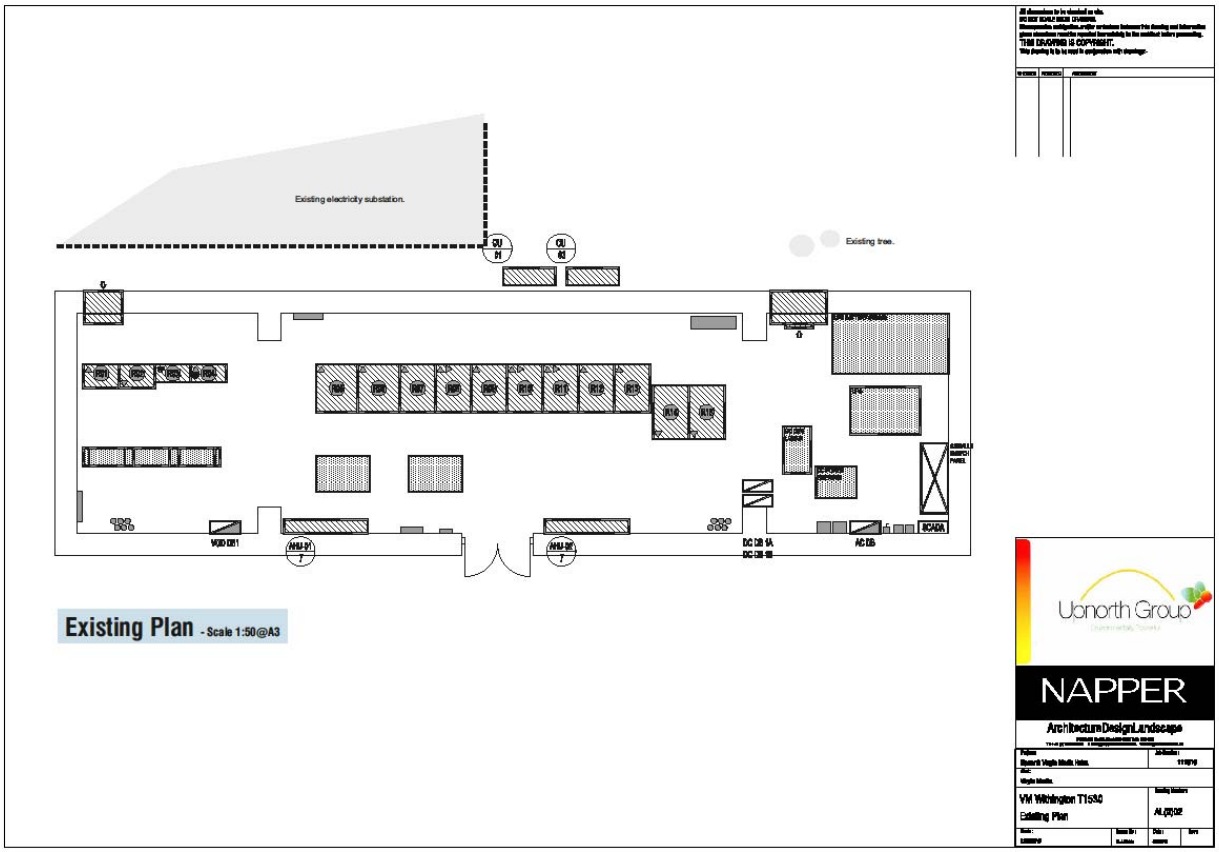

4.3 Napper Architects drawing AL(0)03 Plan as proposed

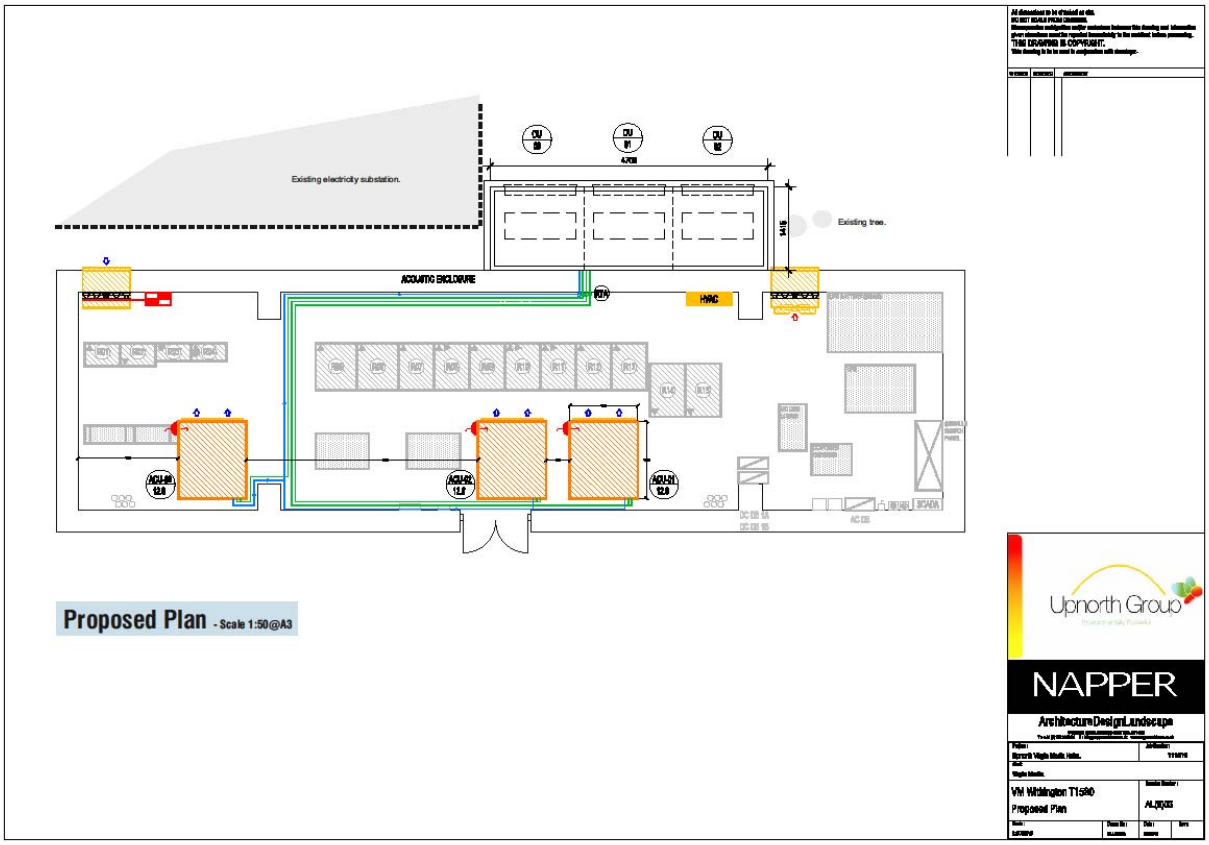

4.4 Napper Architects drawing AL(0)04 Elevations as existing and as proposed

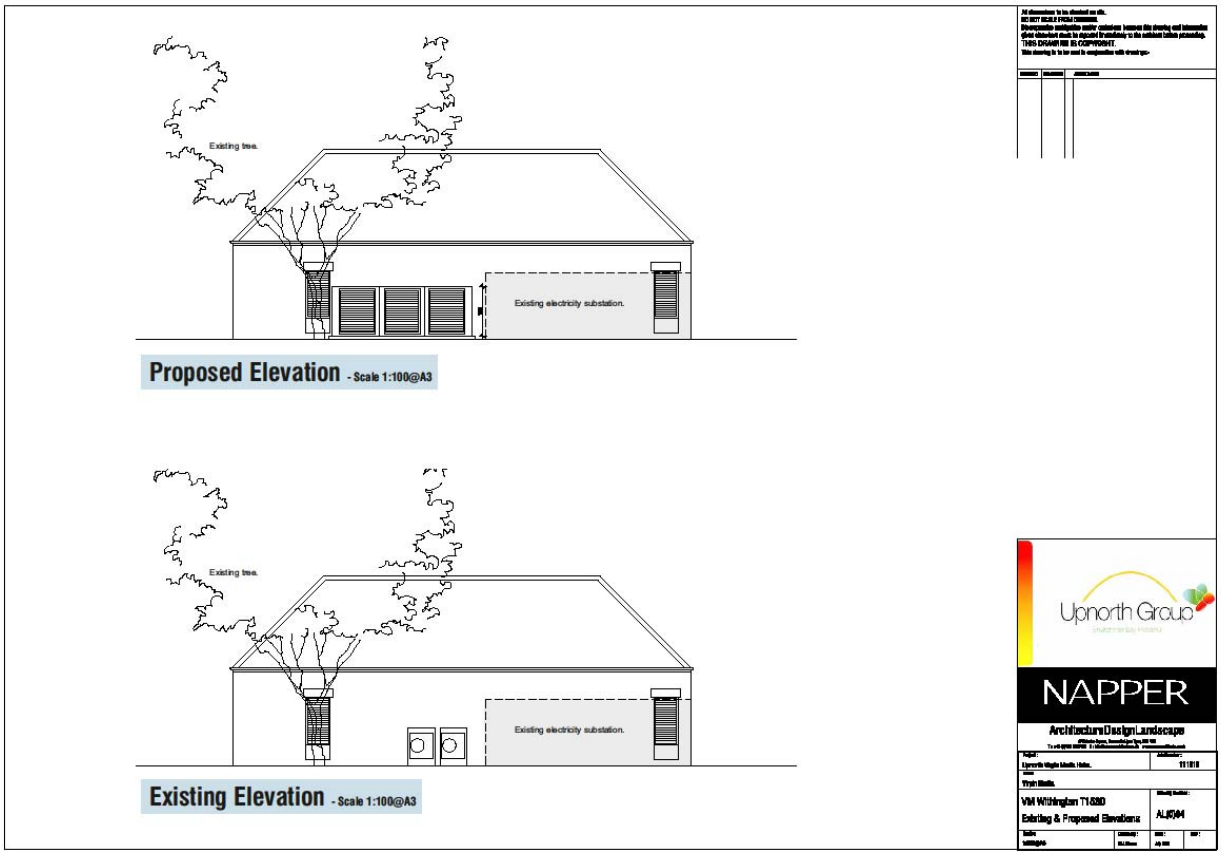

4.5 Uniflair : MRA0611 Condenser fabrication drawing

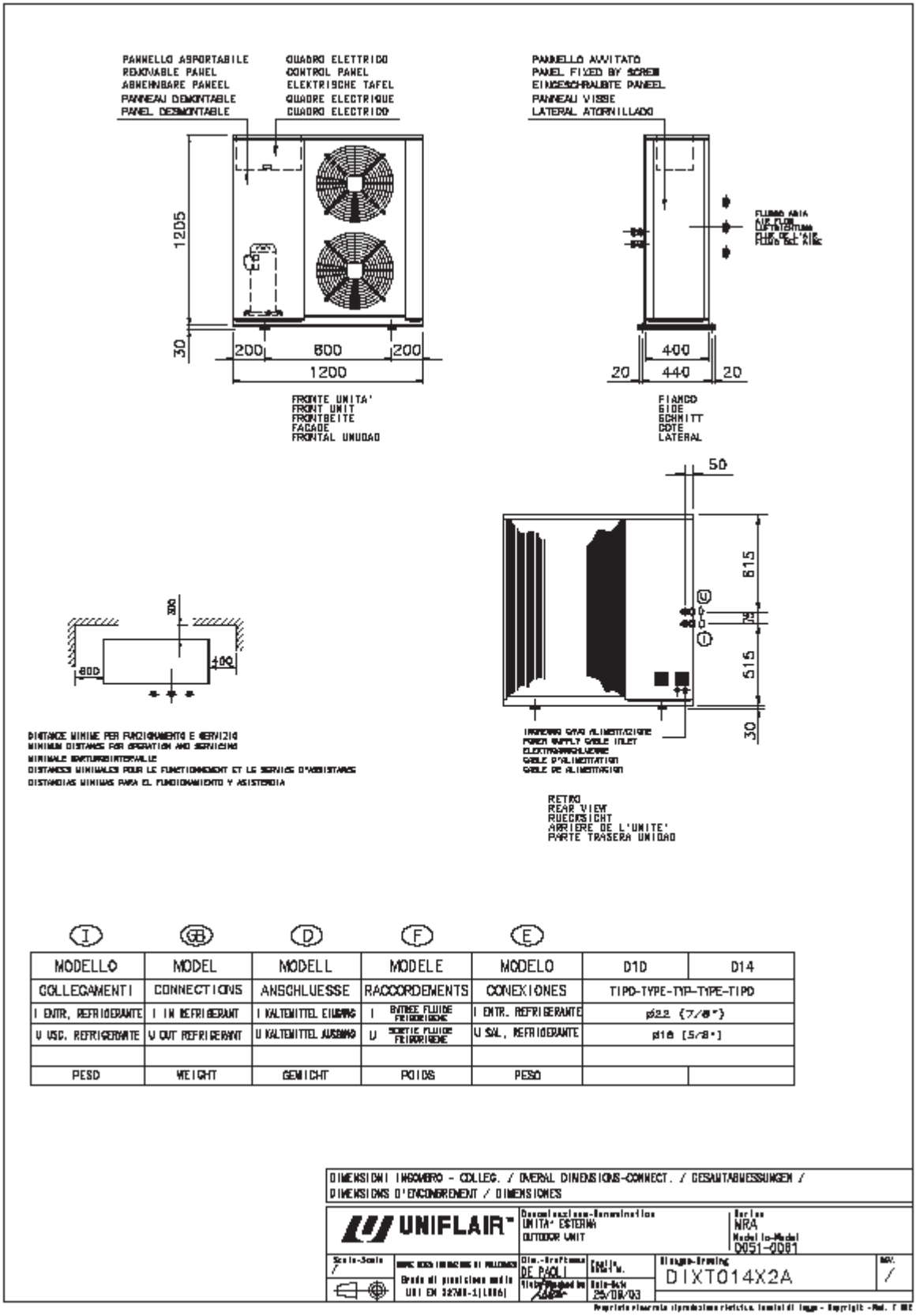

(I)	(GB)	(D)	(F)	(E)		
MODELLO	MODEL	MODELL	MODELE	MODELO	D1D	D14
COLLEGAMENTI	CONNECTIONS	ANSCHLUESSE	RACCORDEMENTS	CONEXIONES	TIPO-TYPE-TYP-TYPE-TIPO	
I ENTR. REFRIGERANTE	I IN REFRIGERANT	I KALTEMITTEL EINGANG	I ENTREE FLUIDE FRIGORIGENE	I ENTR. REFRIGERANTE	ø22 (7/8")	
U USC. REFRIGERANTE	U OUT REFRIGERANT	U KALTEMITTEL AUSGANG	U SORTIE FLUIDE FRIGORIGENE	U SAL. REFRIGERANTE	ø18 (5/8")	
PESO	WEIGHT	GEWICHT	POIDS	PESO		

DIMENSIONI INGOMBRO - COLLEG. / OVERALL DIMENSIONS-CONNECT. / GESAMTABMESSUNGEN / DIMENSIONS D'ENCOMBREMENT / DIMENSIONES

UNIFLAIR

Denominazione-Denomination: UNITA' ESTERNA / OUTDOOR UNIT

Serie: MRA

Model lo-Model: D051-0D01

Scala-Scale: /

Dis.-Drafted: DE PAOLI

Data: 25/09/03

Disegno-Drawing: DIXT014X2A

REV.: /

Proprietà riservata riproduzione vietata. Tutela di legge - Copyright - Rest. D.

4.6 Uniflair : MRA0611 Condenser / UCF0481 Cassette technical data

DIMENSIONI DELL'UNITÀ | ***UNIT DIMENSIONS***

UC* / UW* 0341-0401-0481

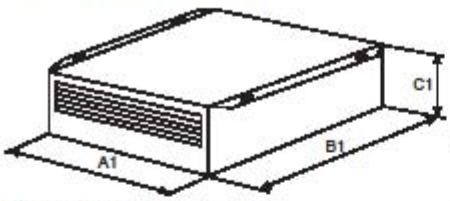

Fig. 4a – Unità senza imballo
Unit without packing

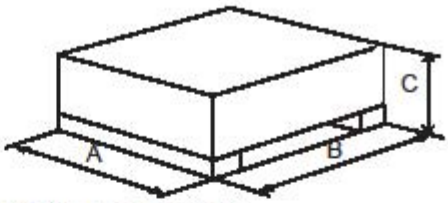

Fig. 4b – Unità con Imballo
Unit with packing

MRA 0221-0281-0341-0401-0611

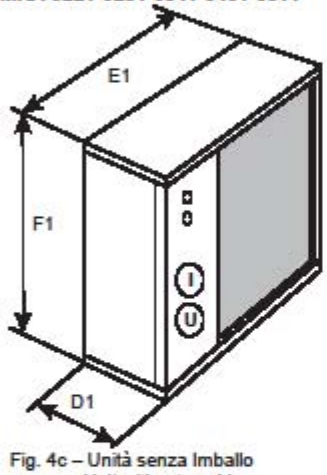

Fig. 4c – Unità senza Imballo
Unit without packing

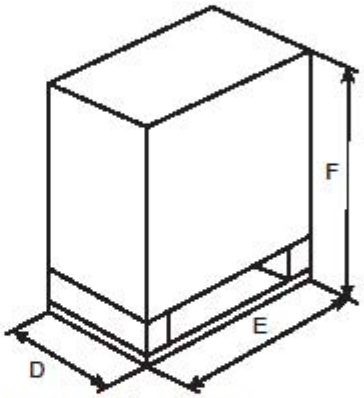

Fig. 4d – Unità con Imballo
Unit with packing

	Unità senza imballo (Fig 4.a e 4.c) [mm] Unit without packing (Fig 4.a and 4.c) [mm]						Unità con imballo [mm] Unit with packing [mm]					
Unit	A1	B1	C1	D1	E1	F1	A	B	C	D	E	F
UC* 0341	950	1050	330	-	-	-	1060	1150	490	-	-	-
UW* 0341	950	1200	330	-	-	-	1120	1300	490	-	-	-
UC* / UW 0401	1150	1300	410	-	-	-	1370	1250	580	-	-	-
UC* / UW* 0481	1150	1300	410	-	-	-	1370	1250	580	-	-	-
MRA0221	-	-	-	360	850	610	-	-	-	480	910	760
MRA0281	-	-	-	360	850	610	-	-	-	480	910	760
MRA0341	-	-	-	360	850	610	-	-	-	480	910	760
MRA0481	-	-	-	480	1200	1230	-	-	-	550	1220	1350
MRA0611	-	-	-	480	1200	1230	-	-	-	550	1220	1350

4.7 Uniflair : MRA0611 Condenser technical / sound data

UNIFLAIR™

TECHNICAL DATA

DATA SHEET REF	:	**QC6860t cont'd**
CONDENSING UNIT SELECTED		**MRA 0611**
Matching room unit model	:	UCF0481
External ambient		**35 °C**
No. of compressors		1
Compressor type		Rotary scroll
Refrigerant type		R407C
Nominal compressor power		4.7 kW
Air volume		1.75 m³/s
External static pressure		0 Pa
Direction of airflow		Horizontal
Type of fan		Axial
Number of fans		2
Total fan power absorbed		0.72 kW
Power supply (V/Ph/Hz)		**400/3+N/50**
Full load current		13 Amps
Dimensions	width	1200 mm
	depth	480 mm
	height	1230 mm
Weight		140 kg
Minimum recommended clearances		
	suction	0.3 m
	compressor side	0.6 m
	opposite side	0.4 m
Sound Pressure Level (Free field)	dB(A)	43.5 @5m

Information regarding inter-connecting pipework & cabling is contained in the Uniflair Engineering Data Manual/drawings. For pipe runs in excess of those shown, please contact us for further advice.

Uniflair has a policy of continuous technological innovation and reserves the right to amend product data at all times. Prior notice may not be possible in all circumstances.

4.8 Uniflair : UCF0481 Cassette technical / sound data

UNIFLAIR™

UNIFLAIR TECHNICAL DATA

PROJECT REF	:		**VM Runcorn**
CLIENT REF	:		**Upnorth Group**
DATA SHEET REF	:		**QC6860t**
UNIT TYPE	:		**Air cooled direct expansion with *free cooling* Ceiling Suspended**
MODEL SELECTED			**UCF0481**
Return air	**dry bulb temperature**		**24 °C**
	relative humidity	(uncontrolled)	**50 %rh**
Ambient temperature			**35.0 °C**
Total cooling capacity at coil			**13.9 kW**
Sensible cooling capacity at coil			**13.5 kW**
Net sensible cooling capacity			**12.6 kW**
Sensible heat ratio			0.97
No. of cooling circuits			**1**
Recirculated air pattern			**underside return/front horizontal discharge**
Free cooling fresh air inlet			**rear entry**
Air volume			1.08 m³/s
External static pressure			0 Pa
No. of motors			3
No. of fans			3
Fan type			direct driven forward curved centrifugal
Total fan motor power absorbed			0.95 kW
Filter efficiency			EU4
Heating type			None
Heating capacity			N.A. kW
Power supply (V/Ph/Hz)			**230/1/50**
Full load current			5.1 Amps
Dimensions	width		1150 mm
	depth		1300 mm
	height		410 mm
Weight			146 kg
Sound pressure level (Free field)	dB(A)		58.0 @ 3m