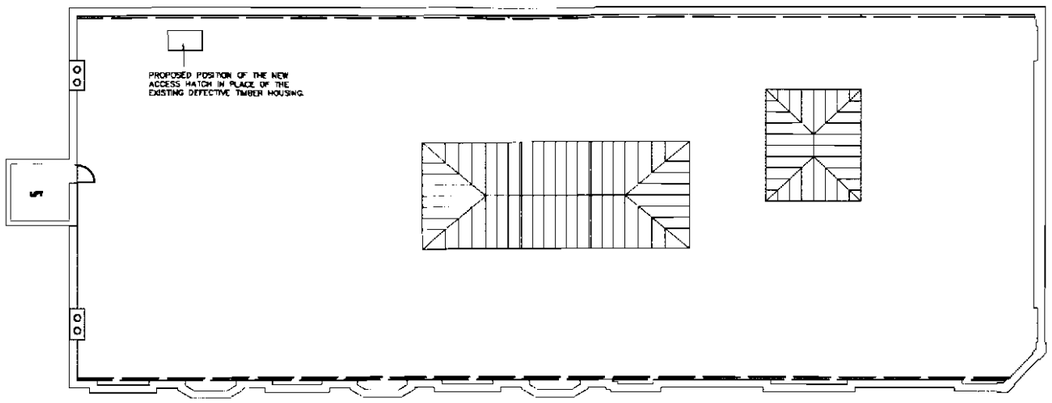

As Proposed Roof Plan with Roof Hatch Position (NTS)

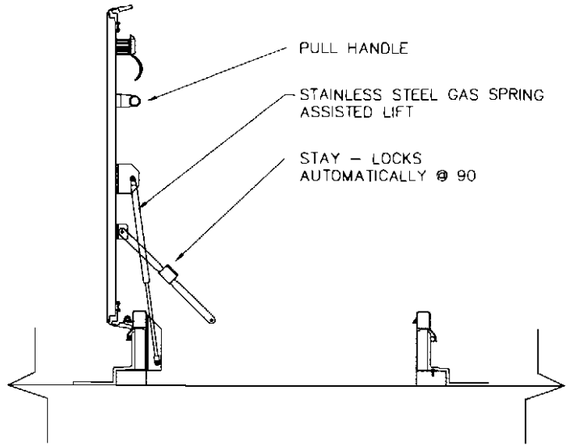

AS PROPOSED ROOF HATCH (1:10)

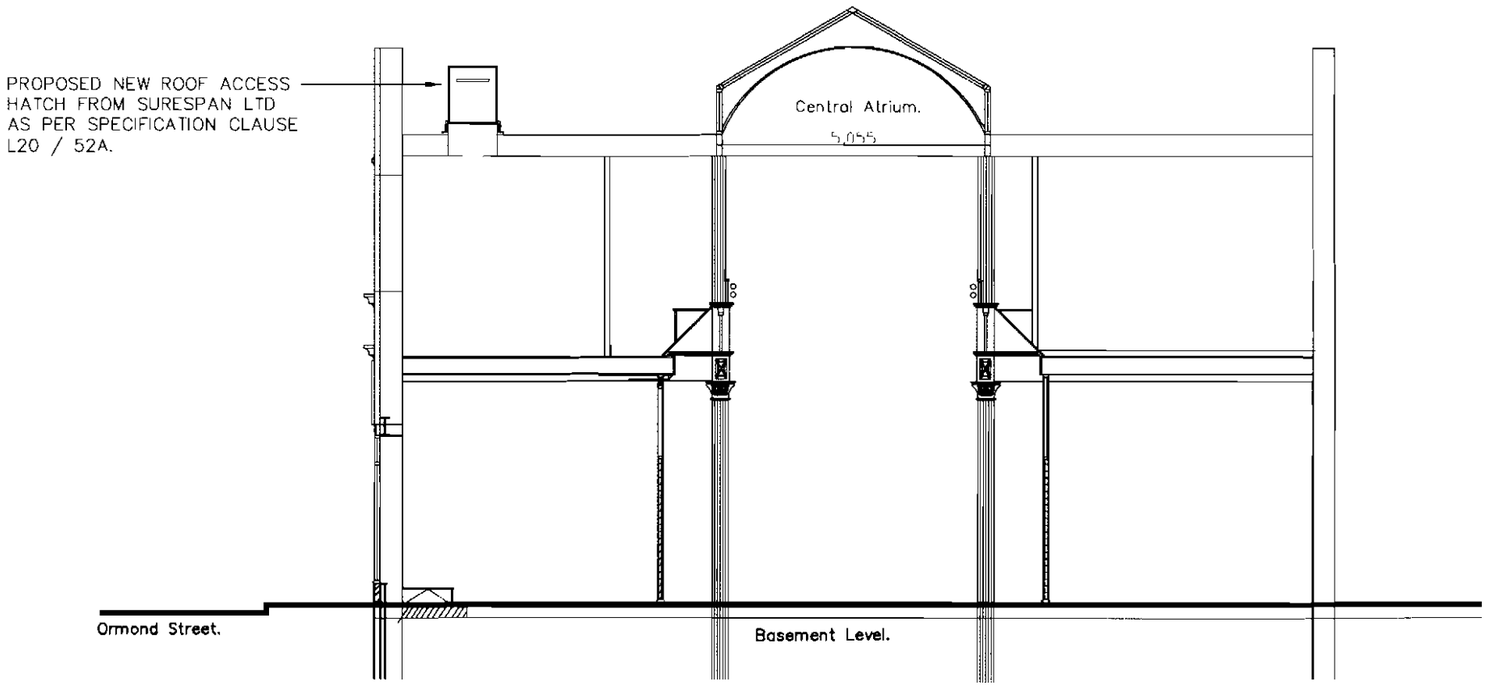

CROSS SECTION (1:50)

projects

1025/014

Dwg. No.

Notes.

Colour of roof access hatch to be Terracotta to match proposed roof covering.

Rev	Date	Revision notes	By	Check
		Listed Development Control Consent	05.03.08	DJH
		Purpose of Issue	Date	Authorised

projects
Jackson House
Sibson Road
Sale
Manchester
M33 7RR
Tel 0161 973 7410
Fax 0161 973 8193
Additional offices in Birmingham, Leeds, Liverpool and Newcastle
www.sajprojects.co.uk

Client
Manchester Metropolitan University
Lower Ormond Street
Manchester
M15 6BX

Drawing Title
As Proposed Cross Section

Project Title
Righton Building
Cavendish Street
Manchester
M15 6BG

Drawn: MA — Date: 06/05/2008
Checked: DJH — Date: 06/0

A3 | DWG No. 1025/014 | Scale VARIOUS | Revision