

Exterior elevation

Installation : 340 Deansgate

Project number : -
Customer : TSK
Processed by : JB - DLUK
Date : 23.01.2008

Project description:

The following values are based on exact calculations on calibrated lamps, luminaires and their arrangement. In practice, gradual divergences can occur.

Guarantee claims for luminaire data are excluded.

Relux and the luminaire manufacturers accept no liability for consequential damage and damage which is occasioned to the user or to third parties.

Object	:	Exterior elevation
Installation	:	340 Deansgate
Project number	:	-
Date	:	23.01.2008

Luminaire data

Delta Light, KUBIX HIC-70 BS (223 30 66 E)

Data sheet

Manufacturer: Delta Light

223 30 66 E **17- EXTERIOR Wall Lamps** **KUBIX HIC-70 BS**

Luminaire data		
Luminaires efficiency	:	28.8% (D84) ⇓ 28.3% ⇑ 71.7%
Control gear	:	
System power	:	70 W
Length	:	140 mm
Width	:	180 mm
Height	:	240 mm

Equipped with		
Number of	:	1
Designation	:	MT//C
Power	:	70 W
Colour	:	ww/3000K
Luminous flux	:	6600 lm

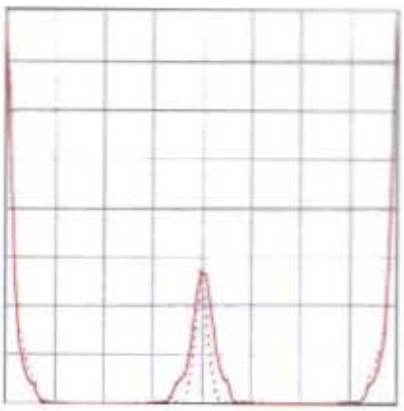

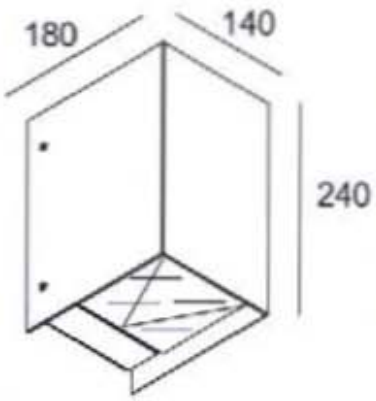



DELTALIGHT®

223 30 66 E / KUBIX HIC-70 BS

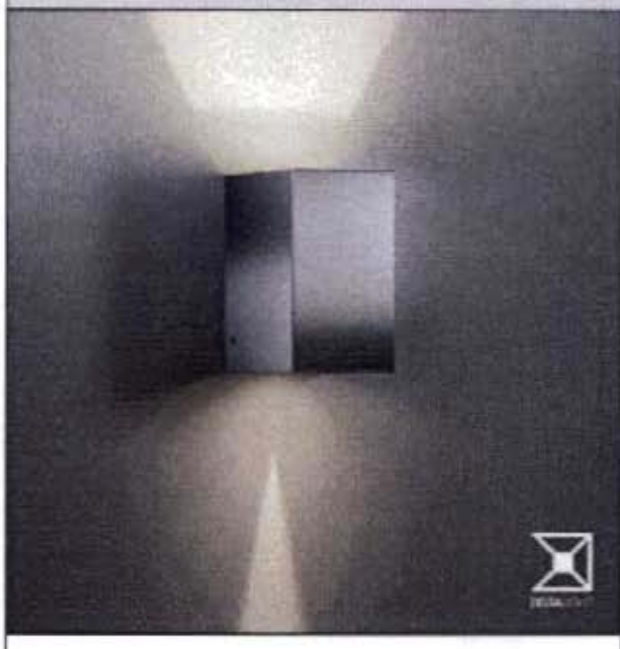

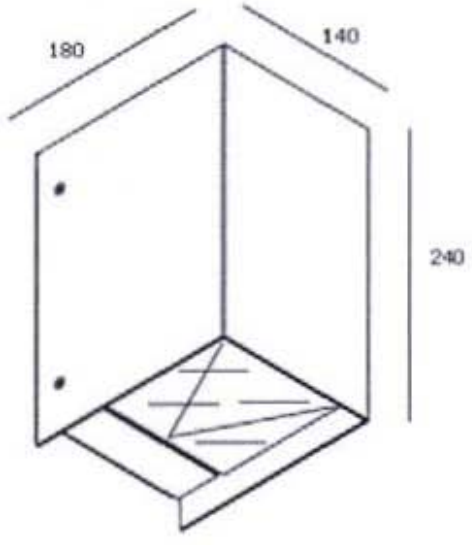

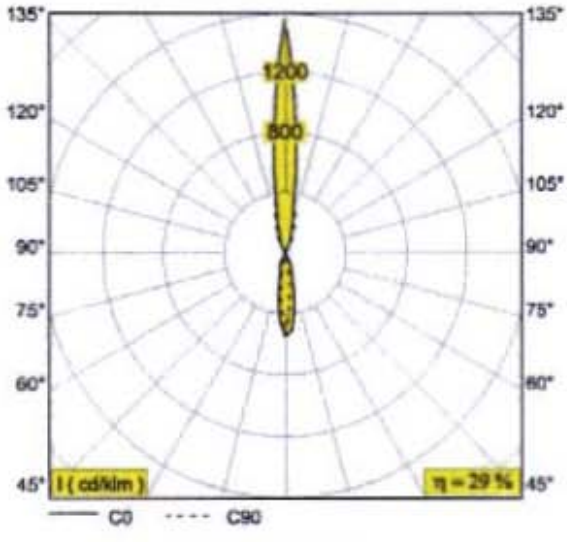

available colour:
INOX : 223 30 66 E INOX
INOX 316 L
G8.5 - 230-240V / 50-60Hz - 1 x 1~EVG
1 x HIT-TC - 70 W (max)
5 kg IP54 0,5
norm: CE - CEBEC
remark: Lightcones KUBIX: - UP: 58° - DOWN: 24°

For detailed installation instructions, please consult the manual.

© DELTA LIGHT 2007

223 30 66 E / KUBIX HIC-70 BS





product details

HCI-TC 70W/830 WDL UVS G8,5 FS1



Product description:	HCI-TC 70W/830 WDL UVS G8,5 FS1 [1]
EAN/ Product:	4050300873831
Quantity:	Folding carton box (FS) contains 1 Piece (PCE)

You can find this product in the eCatalog:
http://catalog.myosram.com?~language=EN&~country=&lt_p=4050300873831

Applications	
Burning position	any
General Description	
ILCOS	MT/UB-70/30/1B-H-G8,5-15/61
Sell-Number	4834637
Base (standard designation)	G8.5
Technical - Electrical Data	
PFC capacitor at 50 Hz	12 µF [2]
Technical - Geometries	
Light centre length (LCL)	52 mm
Technical - Life	
Lifespan	9000 h [3]
Technical - Light Technical Data	
Colour temperature	3000 K
Colour rendering group	1B
Colour rendering index Ra	81
Light colour	830
Luminous efficacy	92 lm/W
Luminous flux	6600 lm
Luminous intensity	- cd
Beam angle	-

Packaging units

EAN	Packaging type and content	Dimensions in h x w x l	Gross weight	Volume
4050300873831	Folding carton box contains 1 Piece	112,000 mm x 45,000 mm x 40,000 mm	0,022 kg (0,010 kg)	0,202 Cubic dec.
4050300873848	Shipping carton box contains 12 Piece	127,000 mm x 140,000 mm x 180,000 mm	0,350 kg (0,120 kg)	3,200 Cubic dec.

1) At rated voltage and cos 0.9
2) At rated voltage and cos 0.9
3) average life

Subject to change without notice. Errors and omission excepted.
© 2007 OSRAM GmbH

Object	:	Exterior elevation
Installation	:	340 Deansgate
Project number	:	-
Date	:	23.01.2008

Exterior

Description, Exterior

Floor plan

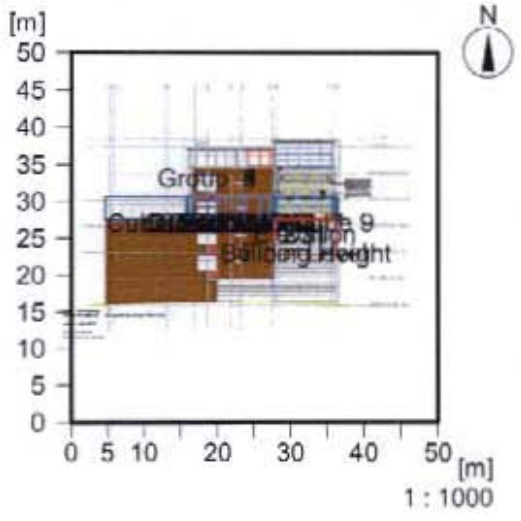

Object	:	Exterior elevation
Installation	:	340 Deansgate
Project number	:	-
Date	:	23.01.2008

Description, Exterior

3D view, View from the front

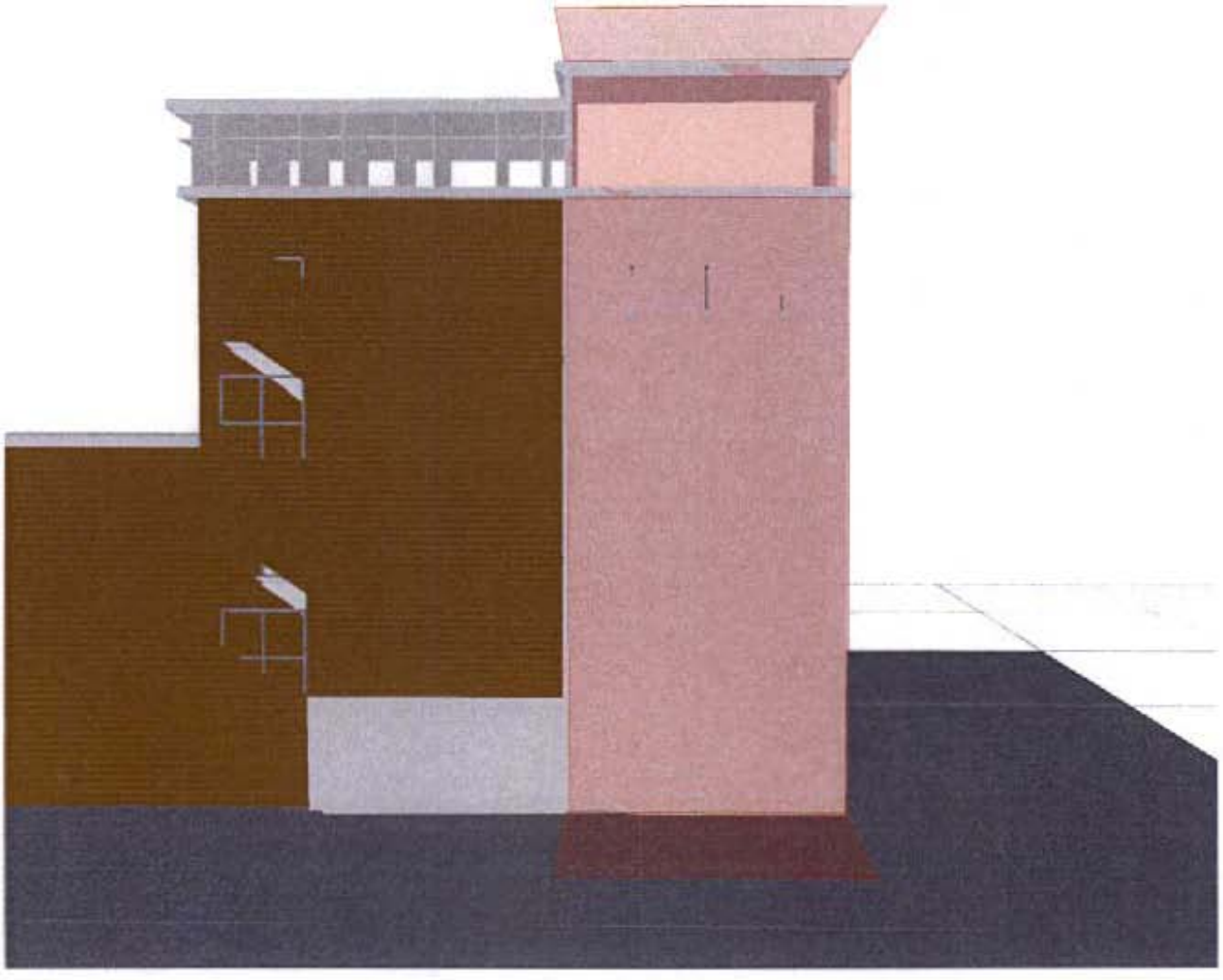

Object	:	Exterior elevation
Installation	:	340 Deansgate
Project number	:	-
Date	:	23.01.2008

Exterior

Summary, Exterior

Result overview, Elevation

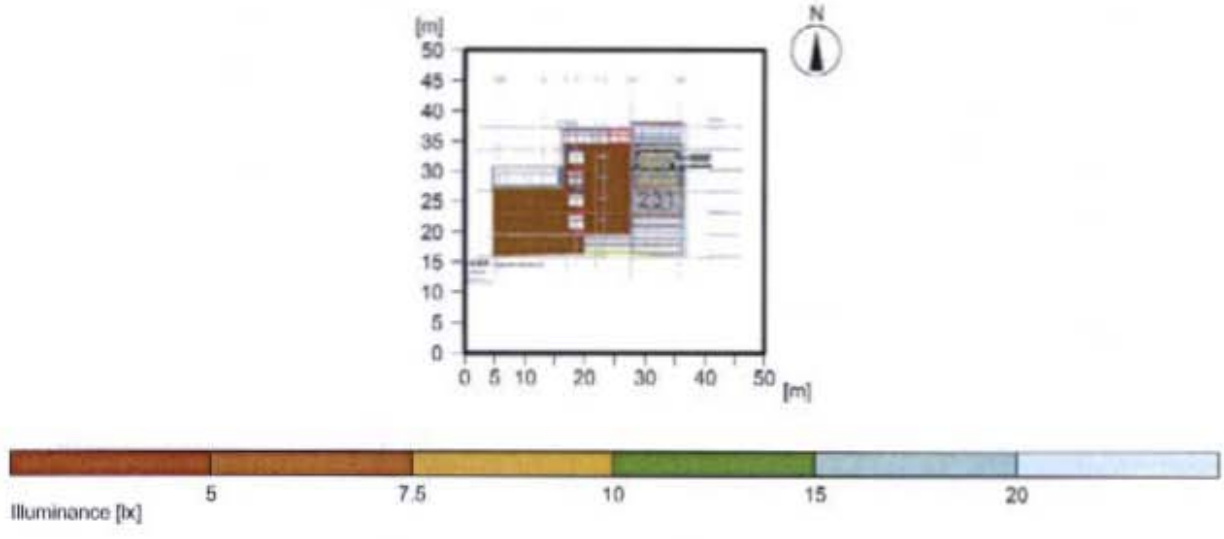

General

Calculation algorithm used	Average indirect fraction
photometric centre height. [m]:	15.00 m
Maintenance factor	0.80
Total luminous flux of all lamps	19800 lm
Total power	210 W
Total power per area (2500.00 m²)	0.08 W/m²

Illuminance

Average illuminance	Eav	11 lx
Minimum illuminance	Emin	0 lx
Maximum illuminance	Emax	5220 lx
Uniformity g1	Emin/Em	1:--- (---)
Uniformity g2	Emin/Emax	1:--- (---)

Type No.\Make

		Delta Light	
1	3	Order No.	: 223 30 66 E
		Luminaire name	: KUBIX HIC-70 BS
		Equipment	: 1 x MT//C 70 W / 6600 lm

Object	:	Exterior elevation
Installation	:	340 Deansgate
Project number	:	-
Date	:	23.01.2008

Exterior

Calculation results, Exterior

Isolines representation, Elevation (E)

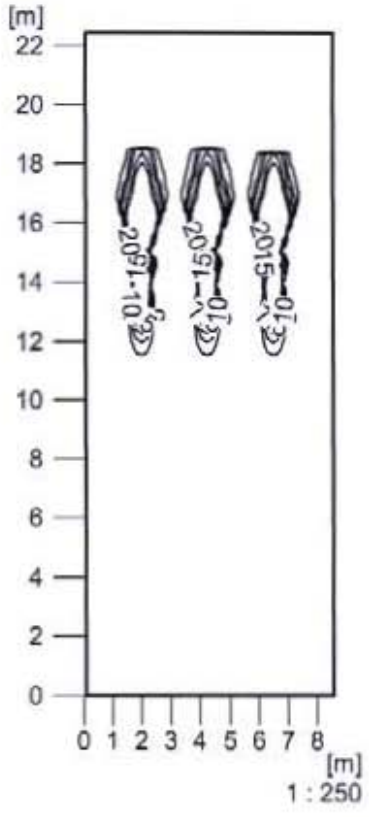

Illuminance [lx]

Average illuminance	Eav	: 11 lx
Minimum illuminance	Emin	: 0 lx
Maximum illuminance	Emax	: 5220 lx
Uniformity g1	Emin/Eav	: ---
Uniformity g2	Emin/Emax	: ---

Object	:	Exterior elevation
Installation	:	340 Deansgate
Project number	:	-
Date	:	23.01.2008

Calculation results, Exterior

Pseudo colours, Elevation (E)

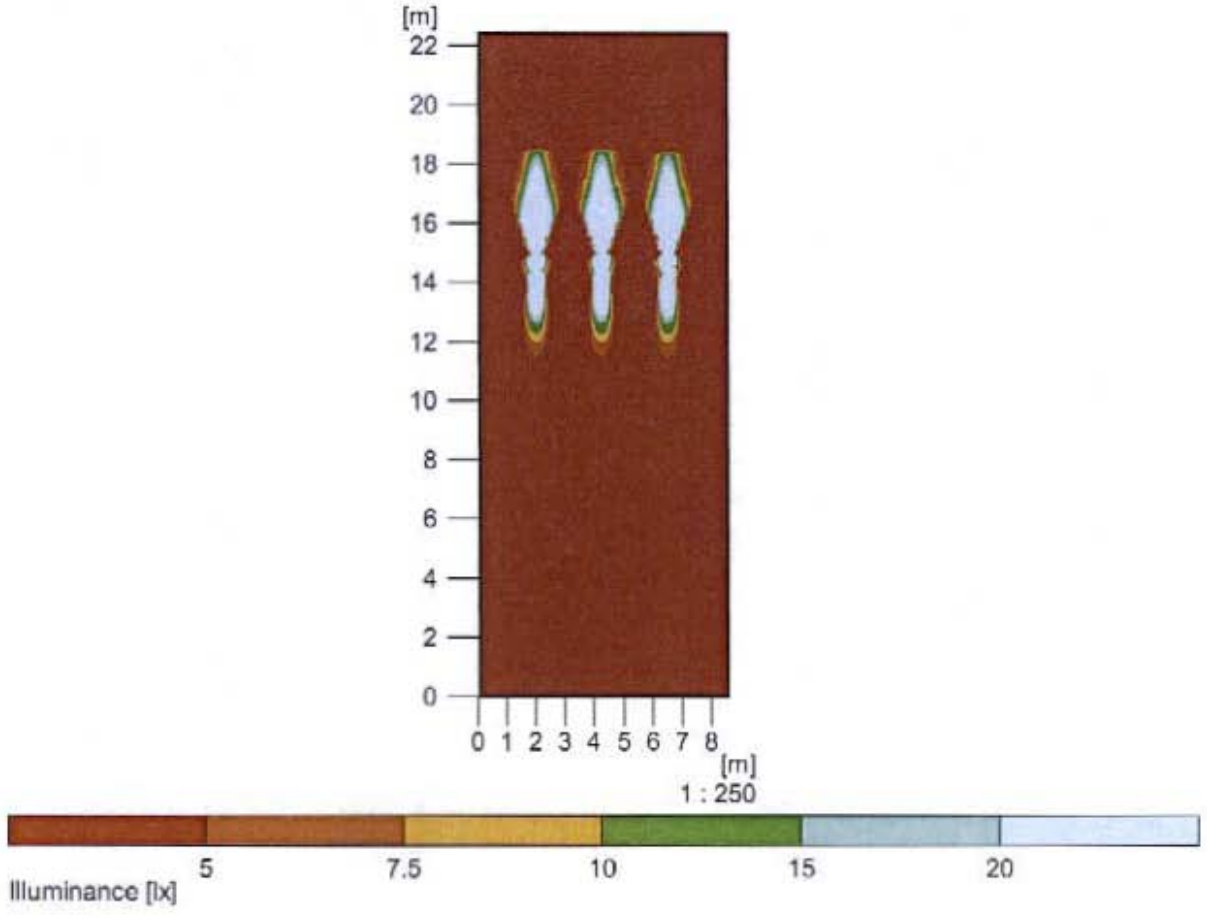

Average illuminance	Eav	: 11 lx
Minimum illuminance	Emin	: 0 lx
Maximum illuminance	Emax	: 5220 lx
Uniformity g1	Emin/Eav	: ---
Uniformity g2	Emin/Emax	: ---

Object	:	Exterior elevation
Installation	:	340 Deansgate
Project number	:	-
Date	:	23.01.2008

Summary, Exterior

Result overview, Floor Level

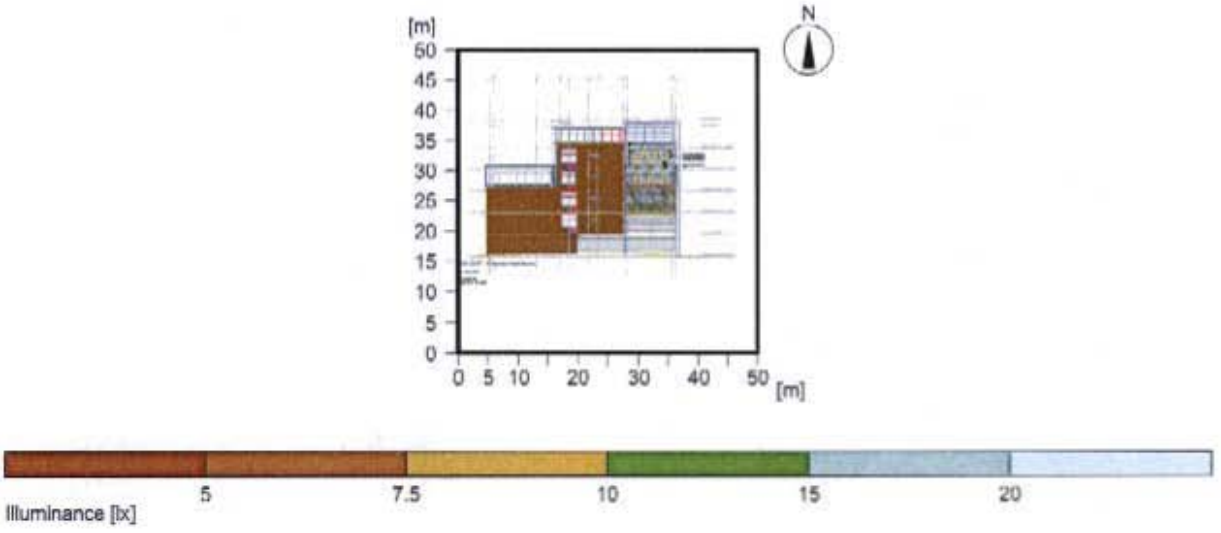

General

Calculation algorithm used	Average indirect fraction
Height of evaluation surface	0.01 m
photometric centre height. [m]:	15.00 m
Maintenance factor	0.80
Total luminous flux of all lamps	19800 lm
Total power	210 W
Total power per area (2500.00 m²)	0.08 W/m²

Illuminance

Average illuminance	Eav	11.8 lx
Minimum illuminance	Emin	5.2 lx
Maximum illuminance	Emax	20 lx
Uniformity g1	Emin/Em	1:2.28 (0.44)
Uniformity g2	Emin/Emax	1:3.88 (0.26)

Type No.\Make

		Delta Light	
1	3	Order No.	: 223 30 66 E
		Luminaire name	: KUBIX HIC-70 BS
		Equipment	: 1 x MT//C 70 W / 6600 lm

Object	:	Exterior elevation
Installation	:	340 Deansgate
Project number	:	-
Date	:	23.01.2008

Calculation results, Exterior

Isolines representation, Floor Level (E)

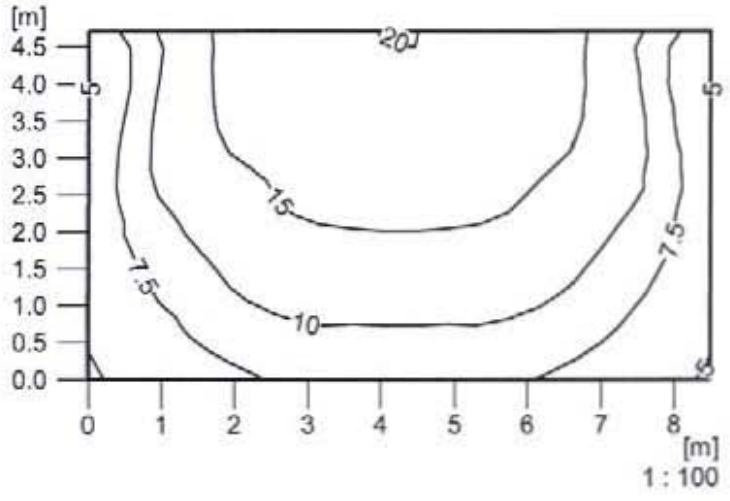

Illuminance [lx]

Height of the reference plane		: 0.01 m
Average illuminance	Eav	: 11.8 lx
Minimum illuminance	Emin	: 5.2 lx
Maximum illuminance	Emax	: 20 lx
Uniformity g1	Emin/Eav	: 1 : 2.28 (0.44)
Uniformity g2	Emin/Emax	: 1 : 3.88 (0.26)

Object	:	Exterior elevation
Installation	:	340 Deansgate
Project number	:	-
Date	:	23.01.2008

Calculation results, Exterior

Pseudo colours, Floor Level (E)

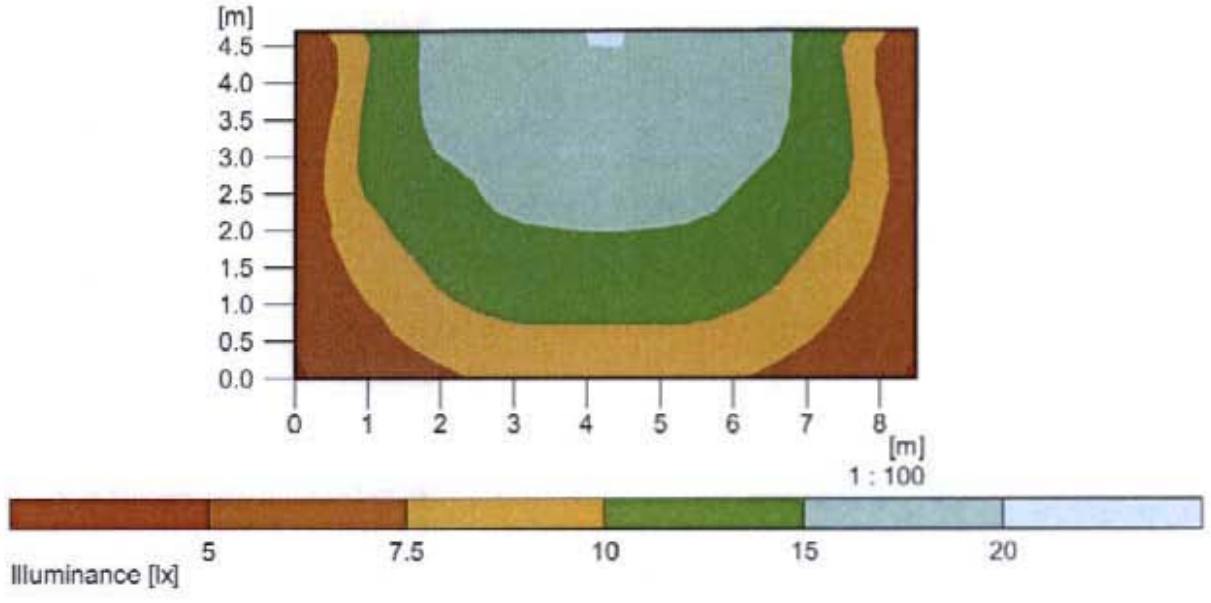

Height of the reference plane		: 0.01 m
Average illuminance	Eav	: 11.8 lx
Minimum illuminance	Emin	: 5.2 lx
Maximum illuminance	Emax	: 20 lx
Uniformity g1	Emin/Eav	: 1 : 2.28 (0.44)
Uniformity g2	Emin/Emax	: 1 : 3.88 (0.26)

Object	:	Exterior elevation
Installation	:	340 Deansgate
Project number	:	-
Date	:	23.01.2008

Summary, Exterior

Result overview, Building Height

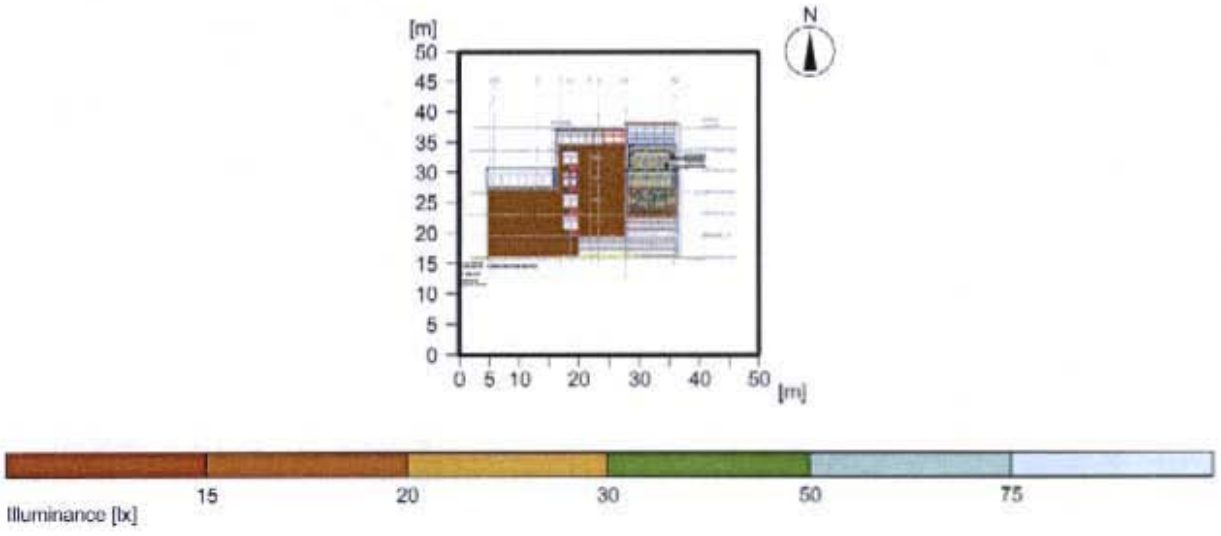

General

Calculation algorithm used	Average indirect fraction
photometric centre height [m]:	15.00 m
Maintenance factor	0.80
Total luminous flux of all lamps	19800 lm
Total power	210 W
Total power per area (2500.00 m²)	0.08 W/m²

Illuminance

Average illuminance	Eav	33 lx
Minimum illuminance	Emin	2 lx
Maximum illuminance	Emax	139 lx
Uniformity g1	Emin/Em	1:13.4 (0.07)
Uniformity g2	Emin/Emax	1:56.5 (0.02)

Type No.\Make

		Delta Light	
1	3	Order No.	: 223 30 66 E
		Luminaire name	: KUBIX HIC-70 BS
		Equipment	: 1 x MT//C 70 W / 6600 lm

Object	:	Exterior elevation
Installation	:	340 Deansgate
Project number	:	-
Date	:	23.01.2008

Calculation results, Exterior

Isolines representation, Building Height (E)

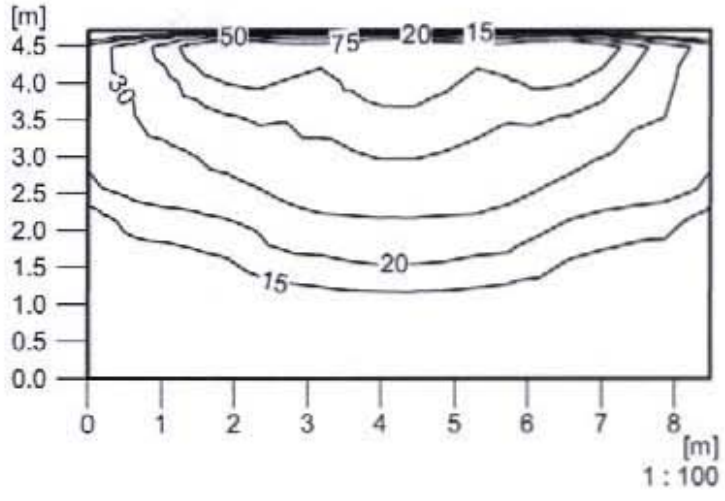

Illuminance [lx]

Average illuminance	Eav	: 33 lx	
Minimum illuminance	Emin	: 2 lx	
Maximum illuminance	Emax	: 139 lx	
Uniformity g1	Emin/Eav	: 1 : 13.37	(0.07)
Uniformity g2	Emin/Emax	: 1 : 56.49	(0.02)

Object	:	Exterior elevation
Installation	:	340 Deansgate
Project number	:	-
Date	:	23.01.2008

Calculation results, Exterior

Pseudo colours, Buliding Height (E)

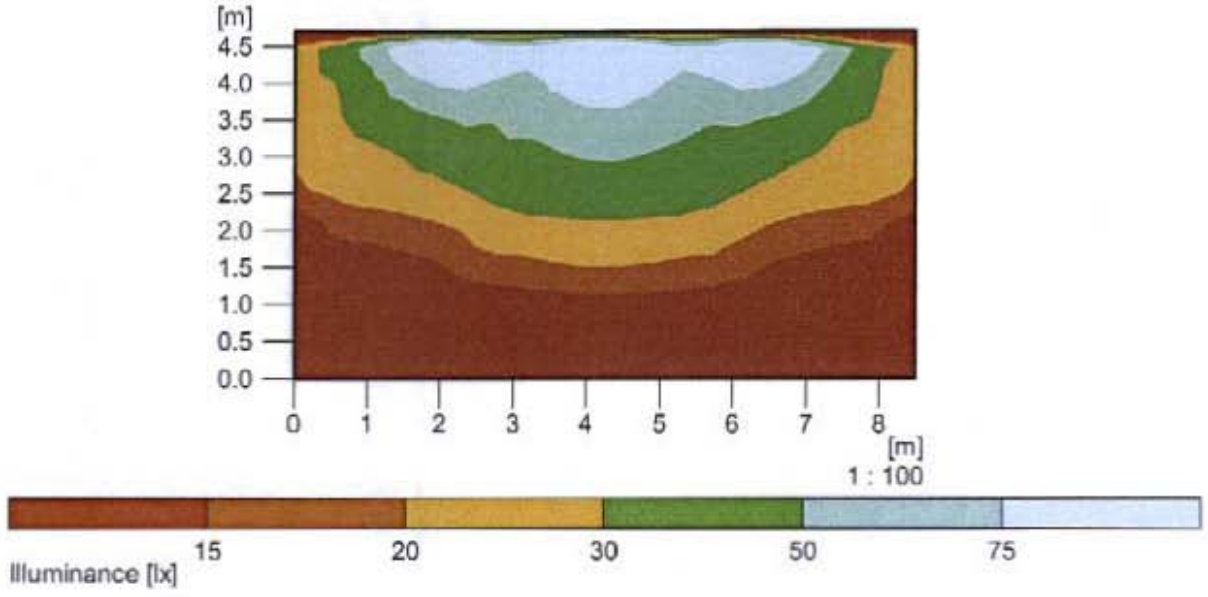

Average illuminance	Eav	: 33 lx
Minimum illuminance	Emin	: 2 lx
Maximum illuminance	Emax	: 139 lx
Uniformity g1	Emin/Eav	: 1 : 13.37 (0.07)
Uniformity g2	Emin/Emax	: 1 : 56.49 (0.02)

Object	:	Exterior elevation
Installation	:	340 Deansgate
Project number	:	-
Date	:	23.01.2008

Calculation results, Exterior

3D luminance, View from the front

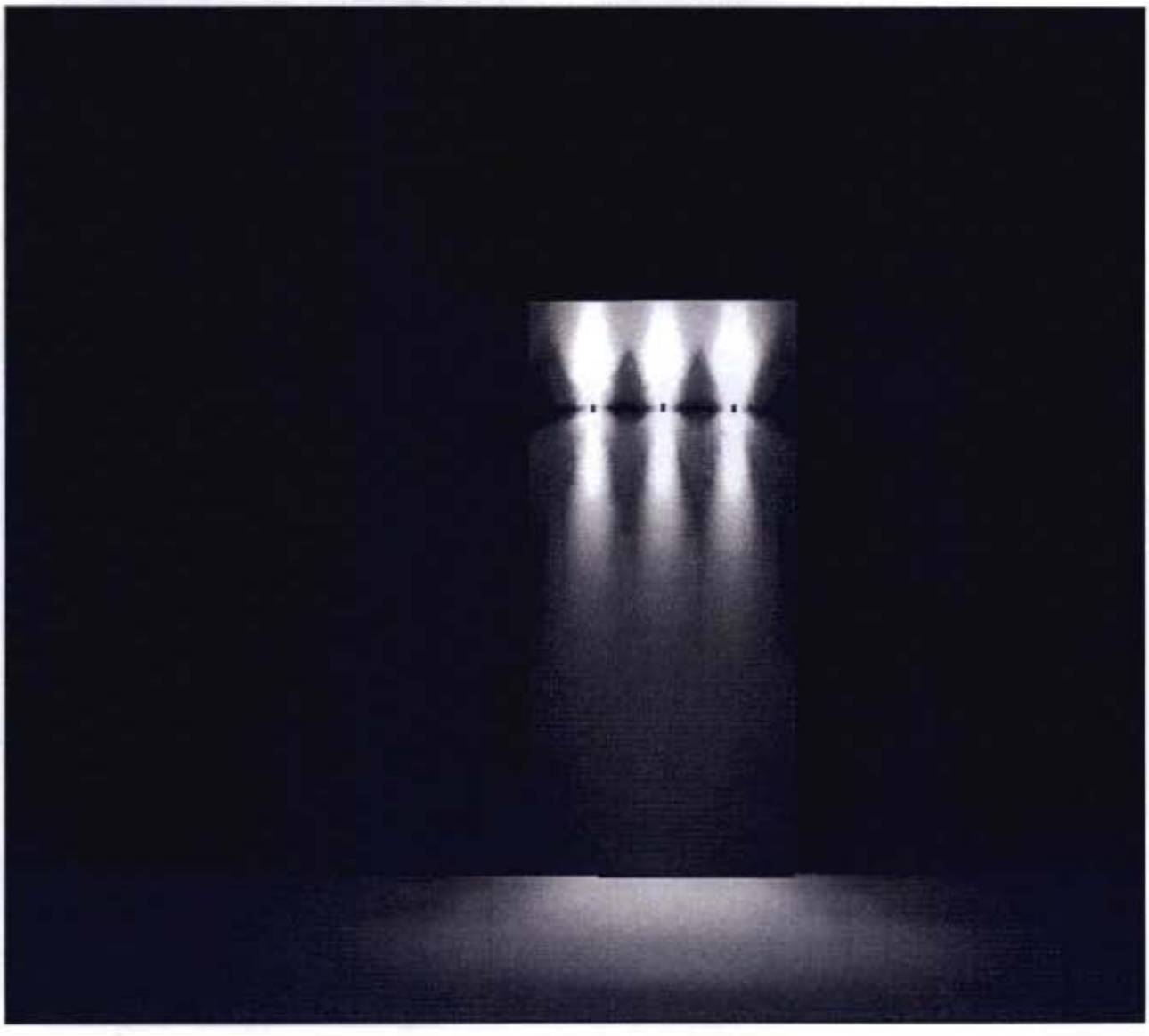

Luminance in the scene

Minimum:	: 0 cd/m²
Maximum:	: 311 cd/m²

Object	:	Exterior elevation
Installation	:	340 Deansgate
Project number	:	-
Date	:	23.01.2008

Calculation results, Exterior

3D pseudo colours, View from the front (E)

