This drawing is the property of Technical Signs and must not be reproduced in part or in full without prior consent of Technical Signs.

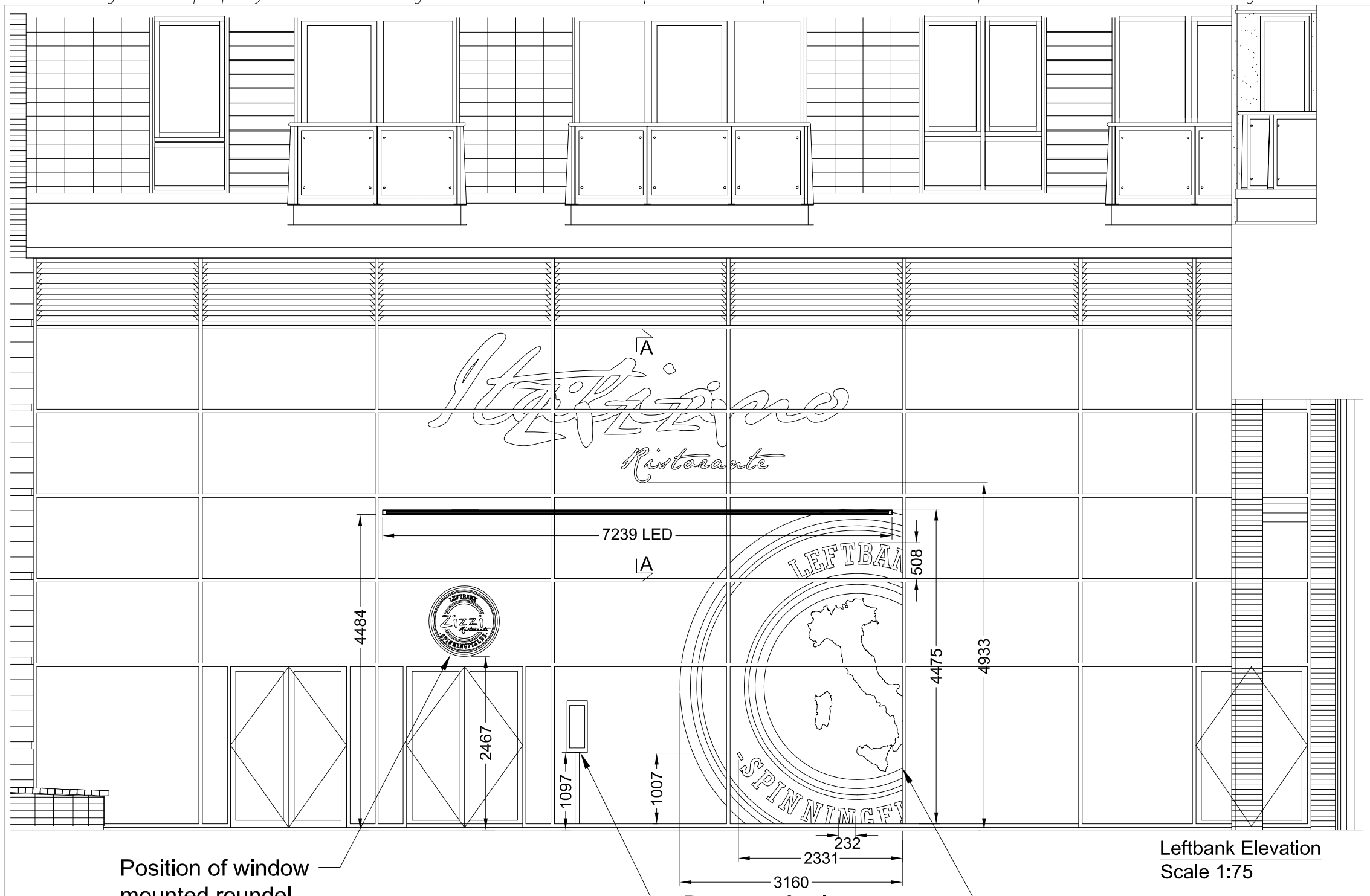

Leftbank Elevation
Scale 1:75

Proposed

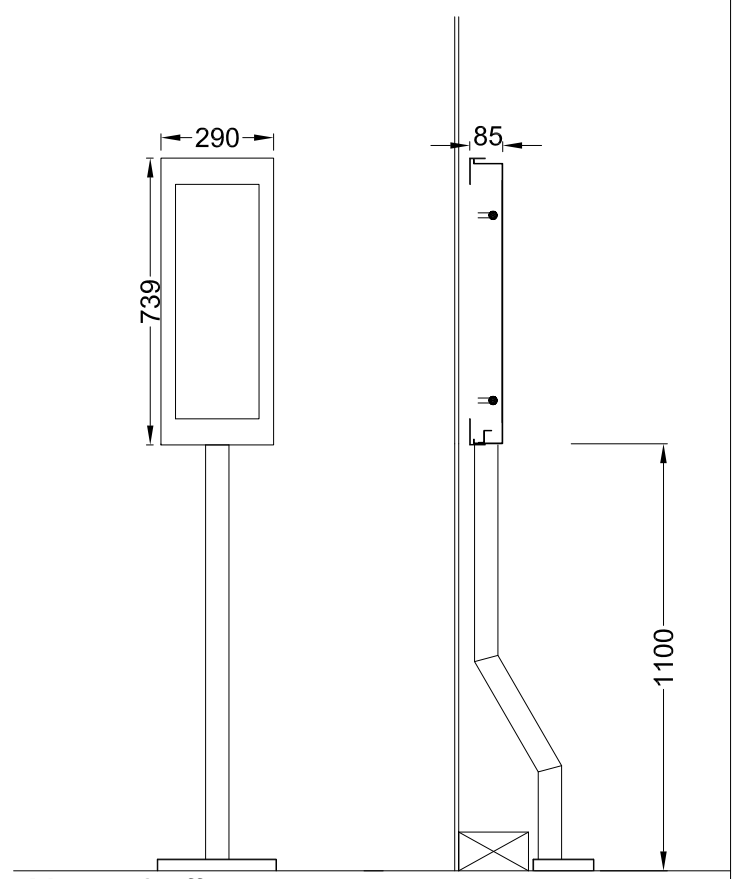

Menu - 2 off
Scale 1:20
Descaled stainless steel menu finished metallic grey.
Fitted with 6mm thick toughened clear glass cover.
Standard cam lock and stainless steel hinge.
Menu fitted with low energy white LED chips in the top recess, for internal illumination.
New menu box fitted to existing posts for display behind the glazing.

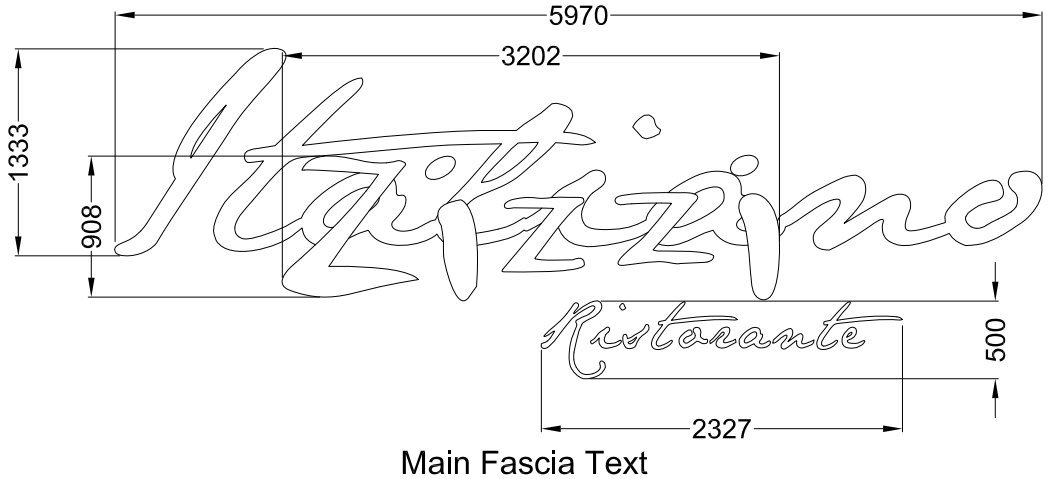

Main Fascia Text
Scale 1:50

Technical Signs
Floor 1 - Unit 3
Hille Business Centre
132 St Albans Road
Watford, Herts, WD2 4AE
Tel: 01923 811999
Fax: 01923 811998
E-mail: info@technicalsigns.co.uk

Client	Zizzi
Address/Job details	Unit 5B Leftbank Spinningfields Manchester M3 3DS Proposed Signage
Job No	
Drawn by	DN
Date	09/12/11
Scale	As specified (A3)
Drawing No	308003-3
Rev	