Solar Powered Telephone Kiosk (with wheelchair access)

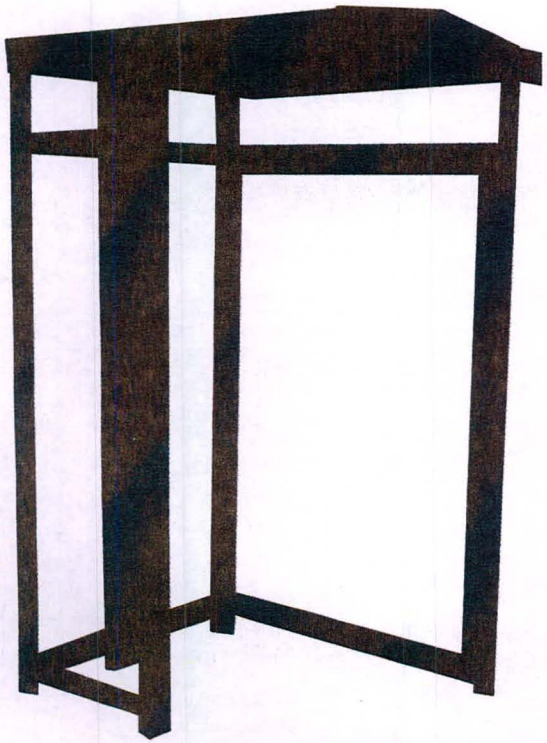

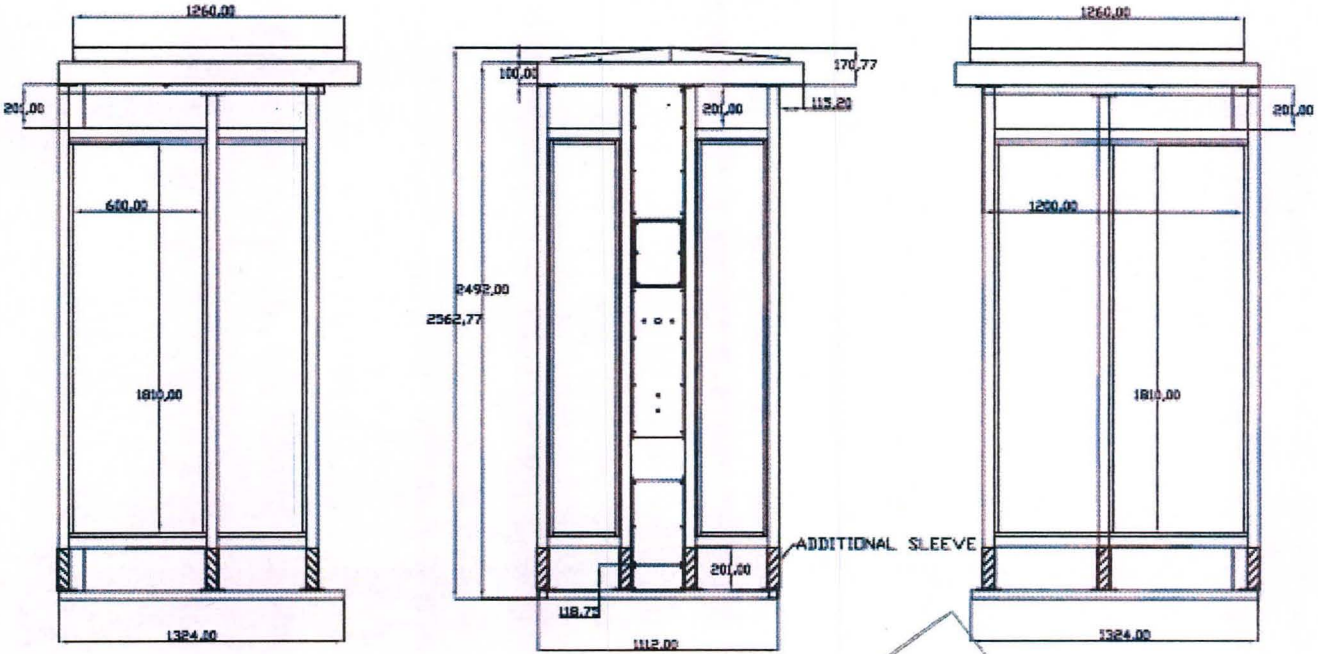

LEFT SIDE VIEW

FRONT VIEW

RIGHT SIDE VIEW

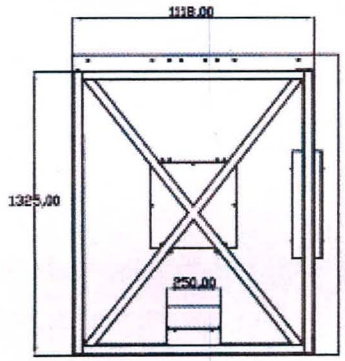

BOTTOM VIEW

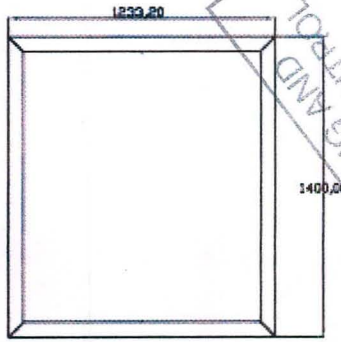

TOP VIEW

Steel Frame
Colour Pillar Black

Clear Polycarbonate
Toughened Glass 8mm

29 SEP 2011
PLANNING AND BUILDING CONTROL

Infocus Public Networks