ATM SECURITIES Ltd.

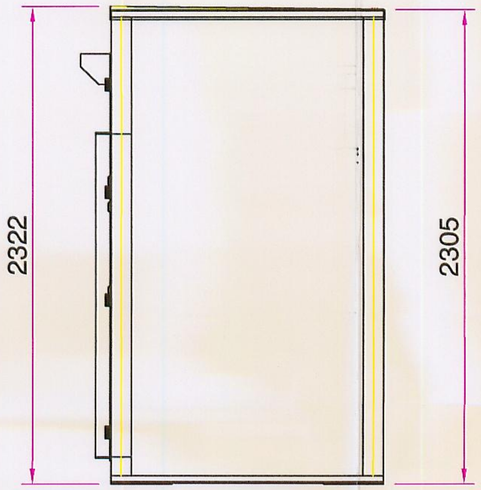

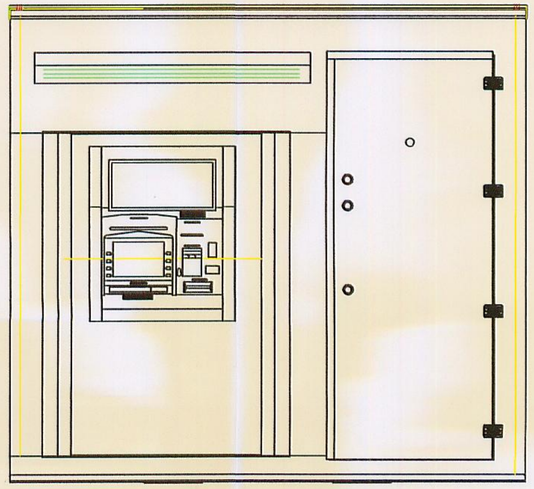

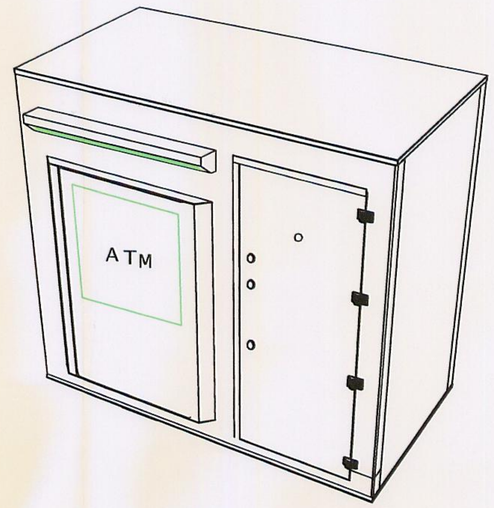

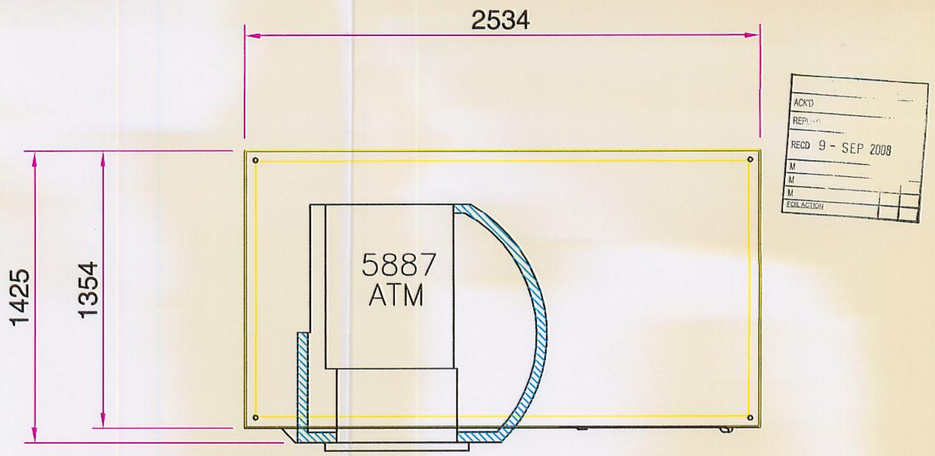

OPERATIONAL

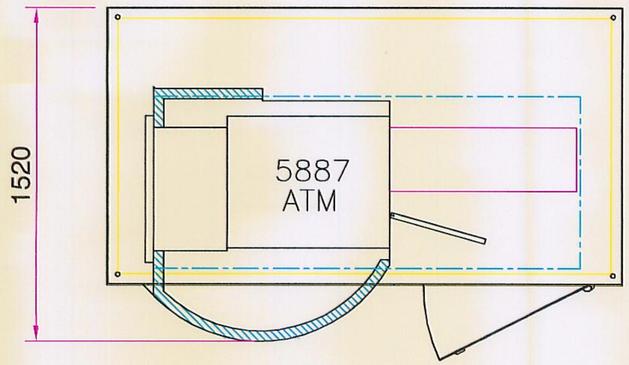

REPLENISHMENT/SERVICING

ATM SECURITIES LTD.	ADDRESS:	CTS HOUSE	DATE 20/09/05	SCALE: NTS	REV	DESCRIPTION	DATE
TEL:01732 760002		HOPE STREET	JOB No. SL5887	DRAWN	01		
FAX:01732 763843		ROTHERHAM	REF:	SHEET	02		
		S60 1LH			03		

The rights in and relating to this publication belong to and are the sole property of ATM Securities Ltd. Neither whole or any part of this publication may be reproduced in any form without prior writen consent from ATM Securities.