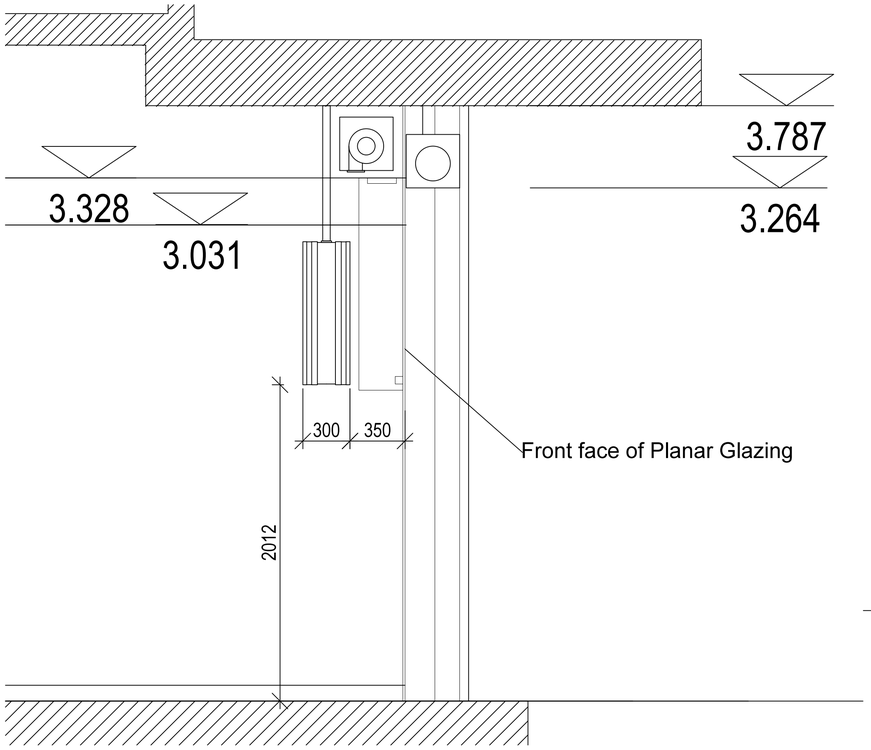


Section 1/20

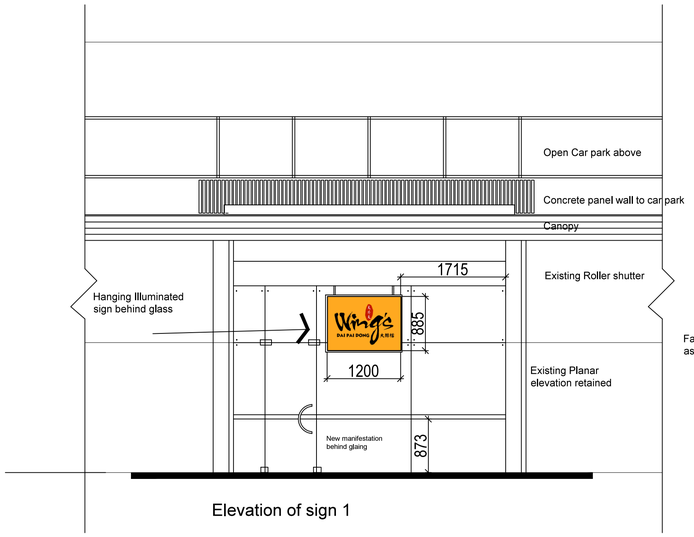


Elevation of sign 1

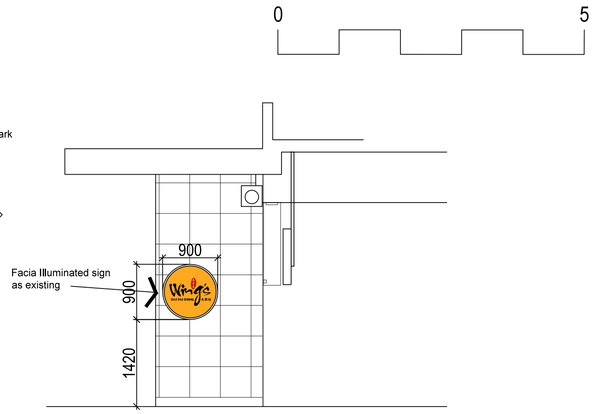


Elevation of sign 2

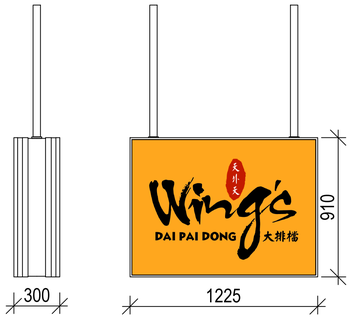


Sign details 1/20




Sign as existing
NTS




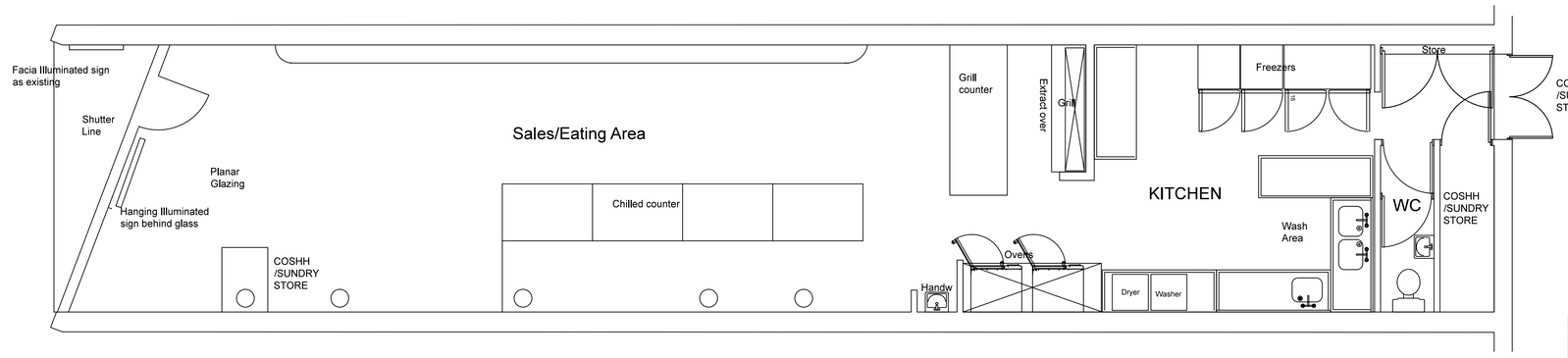


Plan as Proposed

# Planning

| rev | | date | dr by | app by |
|---|---|---|---|---|
| B | Sign Detail added at planners request | 25/04/12 | dh | ss |
| A | Sign Detail added at planners request | 22/04/12 | dh | ss |

original drawn by (name): Autocad — 02.04.12

D&D Architecture and Consultancy
t 07788 544046
f 01706860940
e david.holmes@architectureandconsultancy.co.uk

client: Mr Wing Sing Chu

project: Proposed eat in/Takeaway

drg: 37 King Street West, Manchester
Illuminated signage proposed

| scale | sheet size | project no. | drg no. | rev |
|---|---|---|---|---|
| 1:50, 1:20 @ A1 | A1 | 2012.003 | 004 | B |

DO NOT SCALE FROM THIS DRAWING