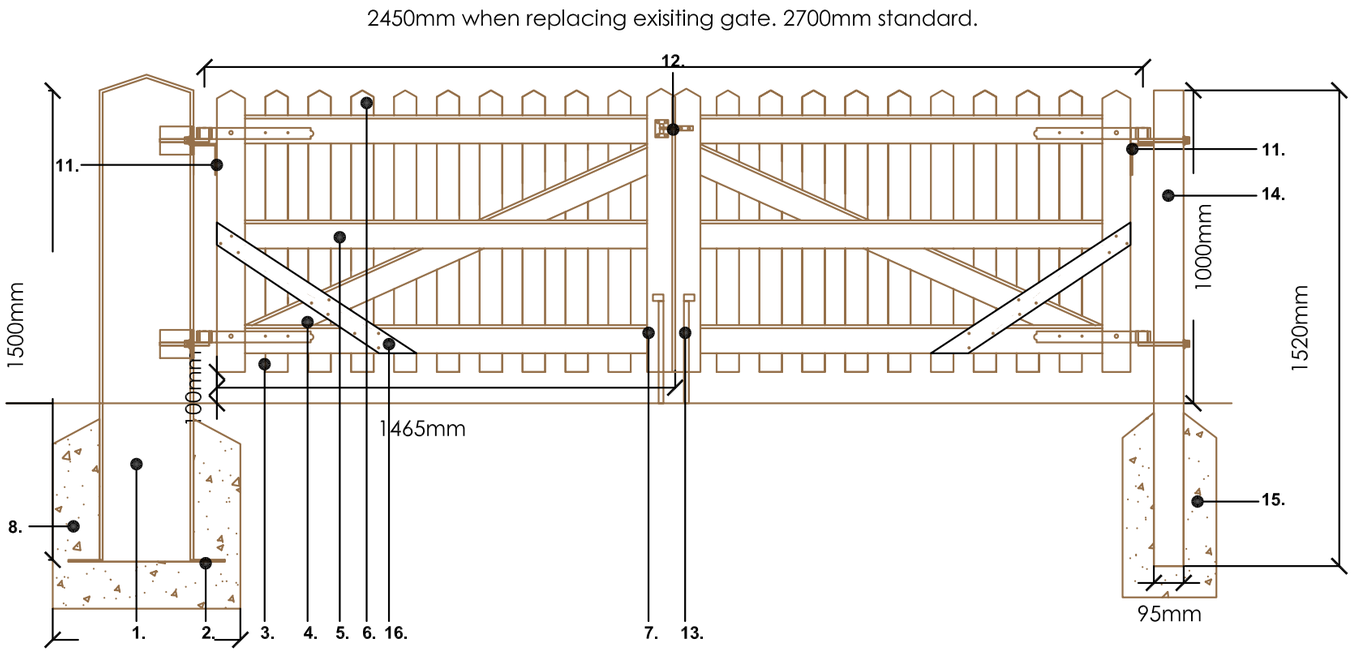

Timber Vehicular Gate Rear Elevation

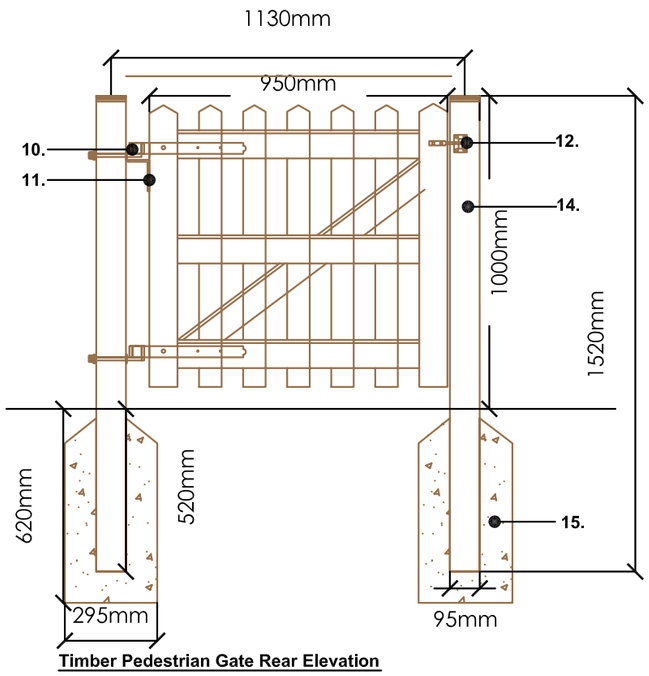

Timber Pedestrian Gate Rear Elevation

Notes:

1a. 300 x 300 x 1500mm RHS gate posts, 8mm thick mild steel. Seam welded feature pointed top as shown to match pointed gate pales.

1b. 300 x 200 x 1500mm RHS gate posts, 8mm thick mild steel. Seam welded feature pointed top as shown to match pointed gate pales.

2. 8mm steel plate foundation plates.

3. 72 x 19mm pressure treated timber pales.

4. 90 x 30mm pressure treated timber chamfered bracing rail.

5. 90 x 30mm pressure treated timber chafered rail.

6. 30 degree pointed top to pales.

7. 55 x 90mm pressure treated timber stile with 30 degree pointed top .

8. 500 x 500mm GEN1 / ST2 concrete to steel gate post.

9. 90 x 90 x 90mm mild steel angle bracket, 8mm steel thickness fully seam welded to gate post. 10mm hole to accept gate hinges.

10. 300mm half double strap hinges with matching hinges. Hinges to be bolted to hinge brackets to be fully adjustable using M12 fixings.

11. Anti theft bracket - 100 x 75 x 6mm mild steel angle bracket fixed below top gudgeon pin with 63mm clutch head screws.

12. Automatic gate latch.

13. Steel drop bolts to both gates.

14. 125 x 95 x 1520mm dome head concrete gate posts.

15. 325 x 295mm GEN1 / ST2 concrete to concrete gate post.

16. 4mm galvaised & painted (black) mild steel reinforcing brace for gates wider than 2450mm. Timber stile and rails to be notch cut (4mm) to accept steel brace in a flush manner. Brace to be firmly secured with min 3no per fixing point (9 total) M8 galvanised domed headed fixings.



Boundary Type No 1D (ii)

Notes
1) Figured dimensions to be taken. Do not scale dimensions. Contractors must verify all dimensions on site before preparing shop drawings or commencing any work.
2) Copyright © This drawing must not be reproduced without the permission of The Groundwork Trust
3) Reproduced from Ordnance Survey mapping with permission of the controller of HMSO.

© Crown copyright. Unauthorised reproduction Infringes Crown copyright and may lead to prosecution or civil proceedings.

General Notes:

Timber gates to be 5th's North European Redwood treated with organic solvent by double vacuum impregnation.

Stiles and palings to have 5mm chamfer on face side corners with tops pointed at 3- degrees, chamfer being carried through to point on all four corners. Rails to have 6mm bevel to both edges.

Rails jointed to stiles with through mortice and tenon, wedges and glued using 'Cascamite' one shot glue. Palings fixed to rails with 4 nr 40mm annular ringed galvanised, resin coated nails per intersection.

Gates shall be delievered to site with a minimum of one factory applied basecoat, consistent with the intended site applied paint or stain system and to the Contract Administrator.

Ironmongery shall all be bright zinc coated and comprise a pair of 300 half double strap hinges with gudgeon pins where required and automatic gate latch and keep.

Gap between pales to be a minimum of 65mm and a maximum of 70mm. Number of pales to be governed by gap size.

Height of gates to be taken as 1000mm.

Steel to be fully welded off site, galvanised and powder coated (Black in colour).

Boundary type no	Width (mm)	Application
1D (i)	1000	Front boundaries - pedestrian access
1D (ii)	2450 & 2700	Front boundaries - vehicular access

Southway Housing Trust

Revisions Notes:

Rev	Date	Notes
A	17-12-10	Adjusted drawing number

GROUNDWORK

CHANGING PLACES CHANGING LIVES

Project	Drawing Title
Southway Housing Trust Driveway Improvements	Boundary Type No 1D (i) & (ii) - Picket Gates

SCALE	DATE	DRAWING NO.	REV	DRAWN BY	CHECKED BY
1:20 @ A3	30.09.10	1612-037	A	AP	PH

Groundwork in Manchester, Salford, Stockport, Tameside & Trafford.
Timber Wharf, 42-50 Worsley Street, Castlefields Manchester, M15 4LD Tel: 0161 220 1000