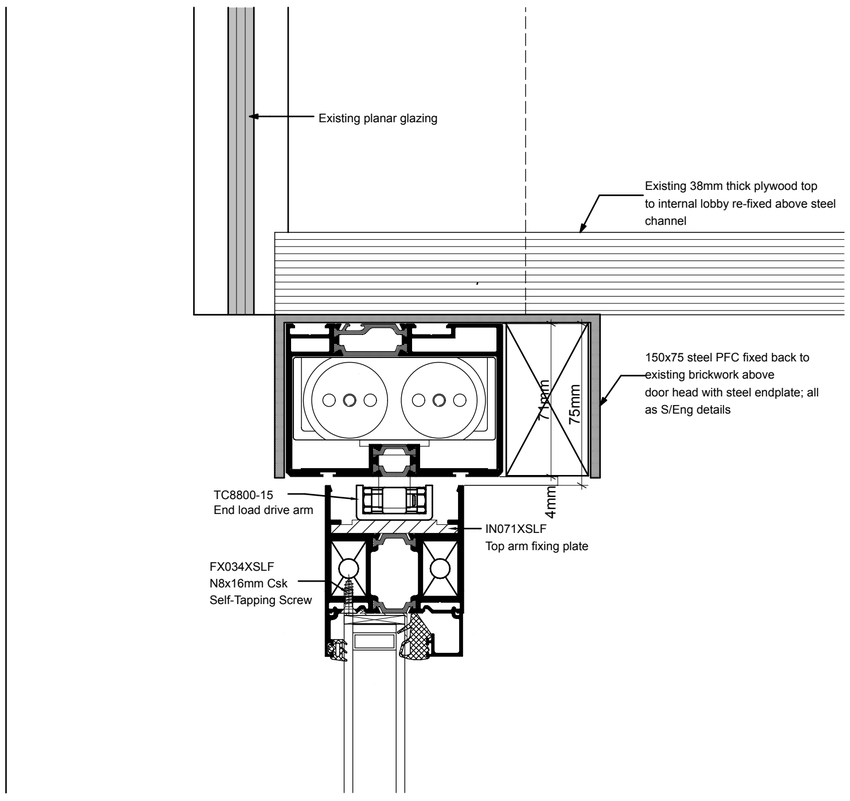


**DOOR HEAD DETAIL D1 1:2@ A1 (1:4@A3)**

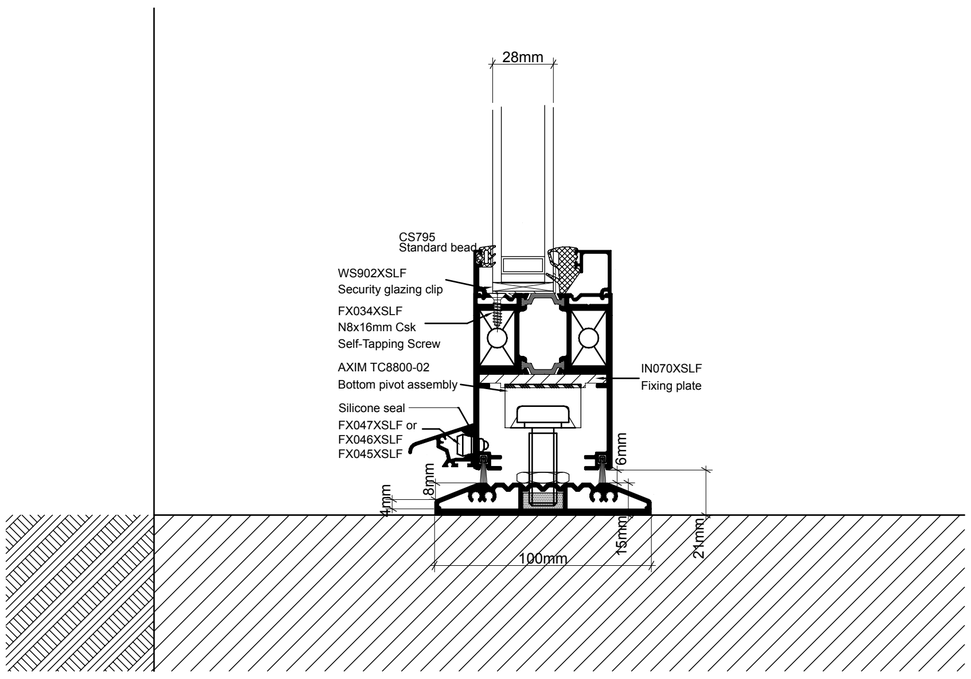


**DOOR THRESHOLD DETAIL D2 1:2@ A1 (1:4@A3)**

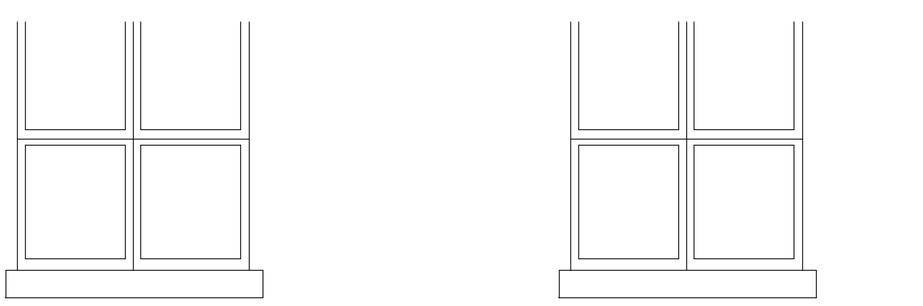

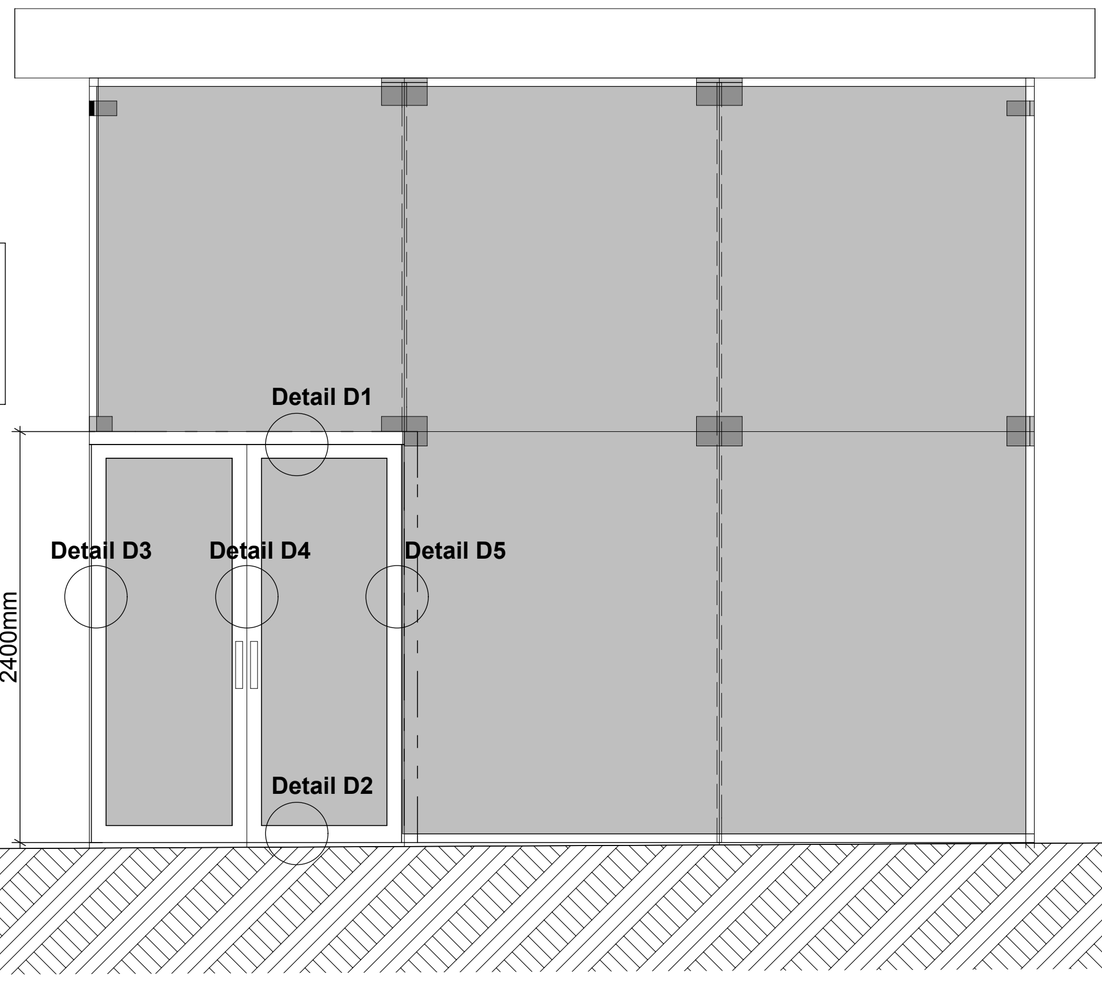


**ELEVATION OF PROPOSED ENTRANCE DOORS 1:25@ A1 (1:50@A3)**

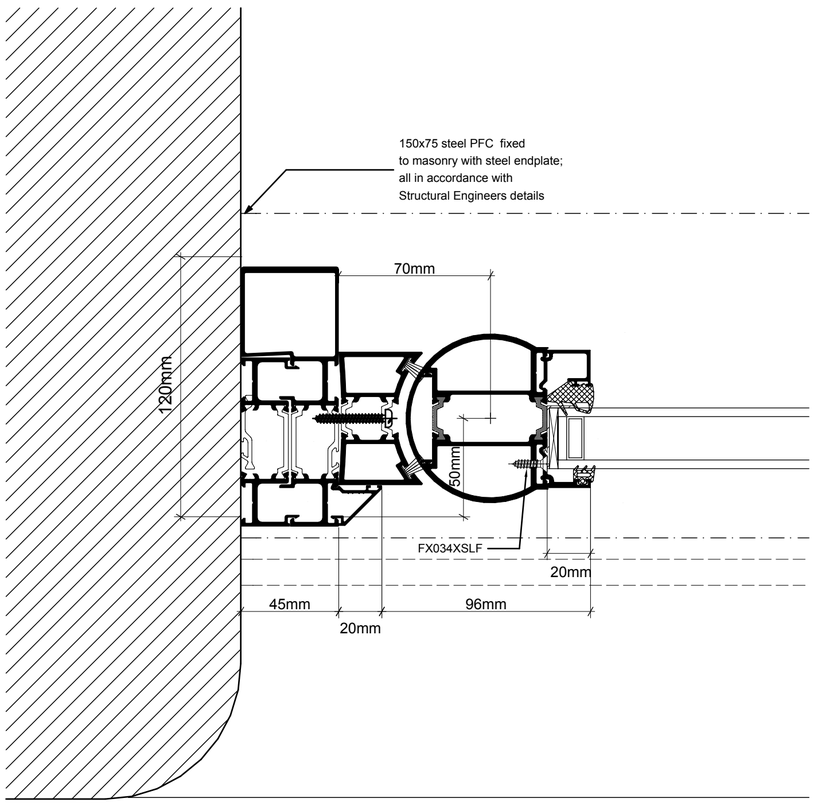


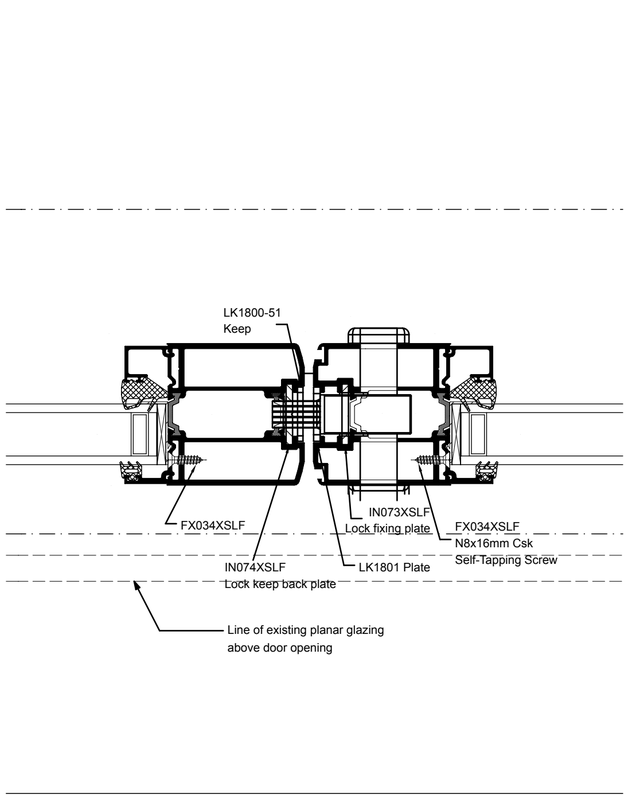


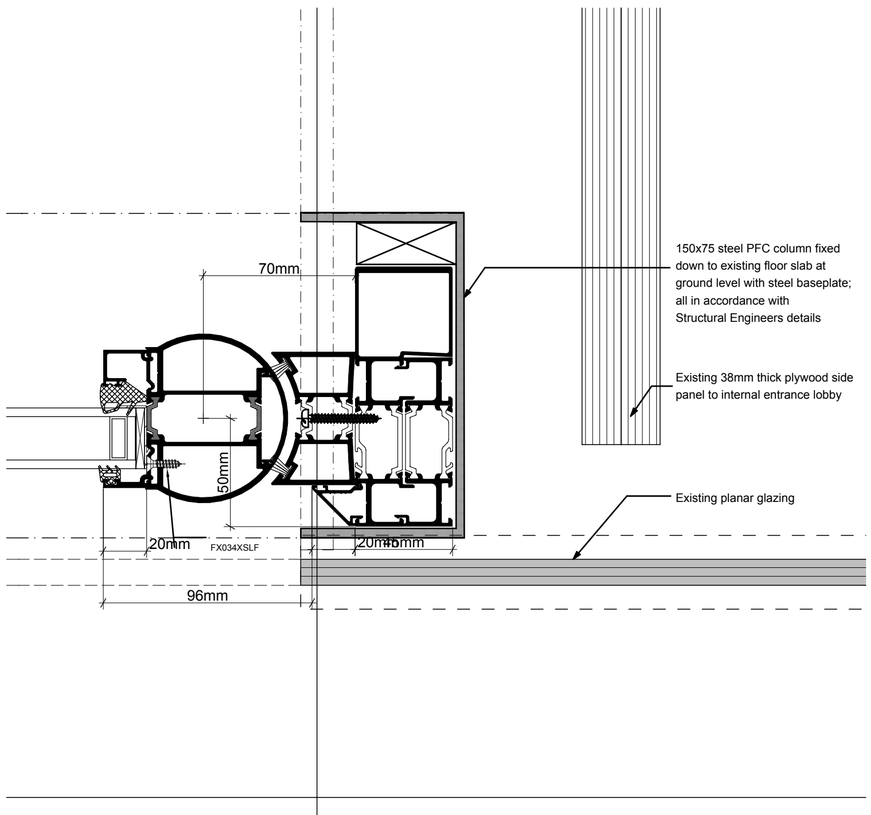


**LH JAMB/BRICKWORK DETAIL D3**
**1:2@ A1 (1:4@A3)**

**DOOR STILES DETAIL D4**
**1:2@ A1 (1:4@A3)**

**RH JAMB/STEEL CHANNEL DETAIL D5**
**1:2@ A1 (1:4@A3)**

**SCHEDULE OF PROPOSED WORKS FOR REPLACE ENTRANCE DOORS:-**
- Remove existing glass sheet entrance door and temporary door panel;
- Remove existing floor springs & make good to threshold;
- Make good to existing pivot hinges to top of existing doors with stainless steel patch fittings/coverplates;
- Remove existing 38mm thick plywood top, rear & side panels to existing internal lobby & save for re-use;
- Remove existing internal lobby door & save for re-use in new position;
- Provide and fix new steel goalpost type frame with PFC column with steel baseplate & endplate all in accordance with Structural Engineers details;
- Instal new Comar 7P.i double action open-in & open-out type aluminium frame double glazed swing doors;
- Provide and fix new threshold strip;
- Provide new small glazed screen to 38mm thick rear panel of existing internal entrance lobby (to allow cafe staff to view new entrance doors);
- Increase size of existing internal plywood lobby and make good/reinstate existing 38mm thick plywood top, rear and side panels;
- Provide new internal entrance matting inside entrance lobby area.

**SPECIFICATION FOR NEW ENTRANCE DOORS:-**
The new inward opening only doors are to be Comar 7P.i type double glazed doors from Comar Architectural Aluminium Systems (www.comar-alu.co.uk).
The doors are to be fitted with anti finger trap stiles and Axim size 3 concealed transom closers.
The slimline aluminium frame is to be finished in a polyester powder coat finish in a RAL colour (Anthracite Grey RAL 7016).
Disabled persons level access is maintained via the replacement double doors and a DDA compliant accessible threshold is also provided; the door handles are to be provided in a contrasting colour to comply with Approved Document M of the Building Regulations.

# PROPROSED ENTRANCE DOOR DETAILS 1:25 & 1:2@A1 (1:50 & 1:4@A3)

## PLANNING /LBC ISSUE

A. Notes amended to confirm doors as inward opening only; RAL colour ref. to be 7016 Anthracite Grey
REVISIONS

Scheme
Replacement of Entrance Doors,
The Engine House
Chorlton Mill
3 Cambridge Street, Manchester

Client
The International Anthony Burgess Foundation

Title
Proposed Entrance Door Details

| Scale | Date | Drawn |
|---|---|---|
| 1:25/1:2 | 26/04/12 | MM |
| Job No | Dwg No | Rev |
| P102 | 05 | A |

Mike Macpherson Architects
38 Reynard Road, Chorlton, Manchester M21 8DD
T: 0161 870 6129
E: mail@mikemacpherson-architects.co.uk
www.mikemacpherson-architects.co.uk