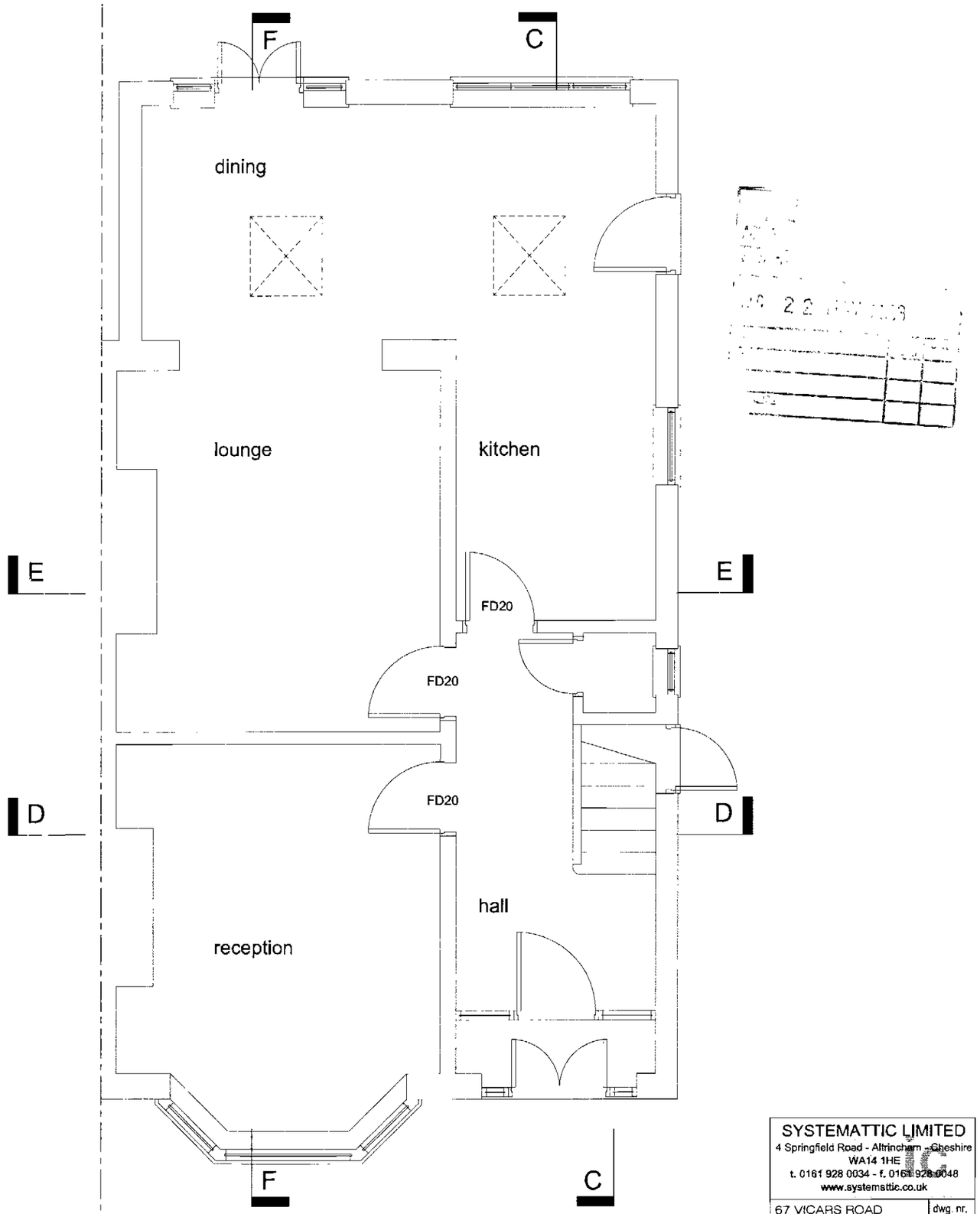

proposed ground floor plan

SYSTEMATTIC LIMITED
4 Springfield Road - Altrincham - Cheshire
WA14 1HE
t. 0161 928 0034 - f. 0161 926 0048
www.systemattic.co.uk

67 VICARS ROAD
CHORLTON
MANCHESTER

dwg. nr. 04

PROPOSED GROUND FLOOR PLAN

scale	drawn	date	rev.
1:50	M.W.	08.05.12	

All levels and dimensions must be checked on site by building contractor prior to commencement of works. Any variations must be reported to Systemattic Limited. All information hereon in is the copyright of Systemattic Limited. Copying in full or in part is forbidden without the written permission from Systemattic Limited.

1:100 10 m
1:50 5 m
1:20 2 m

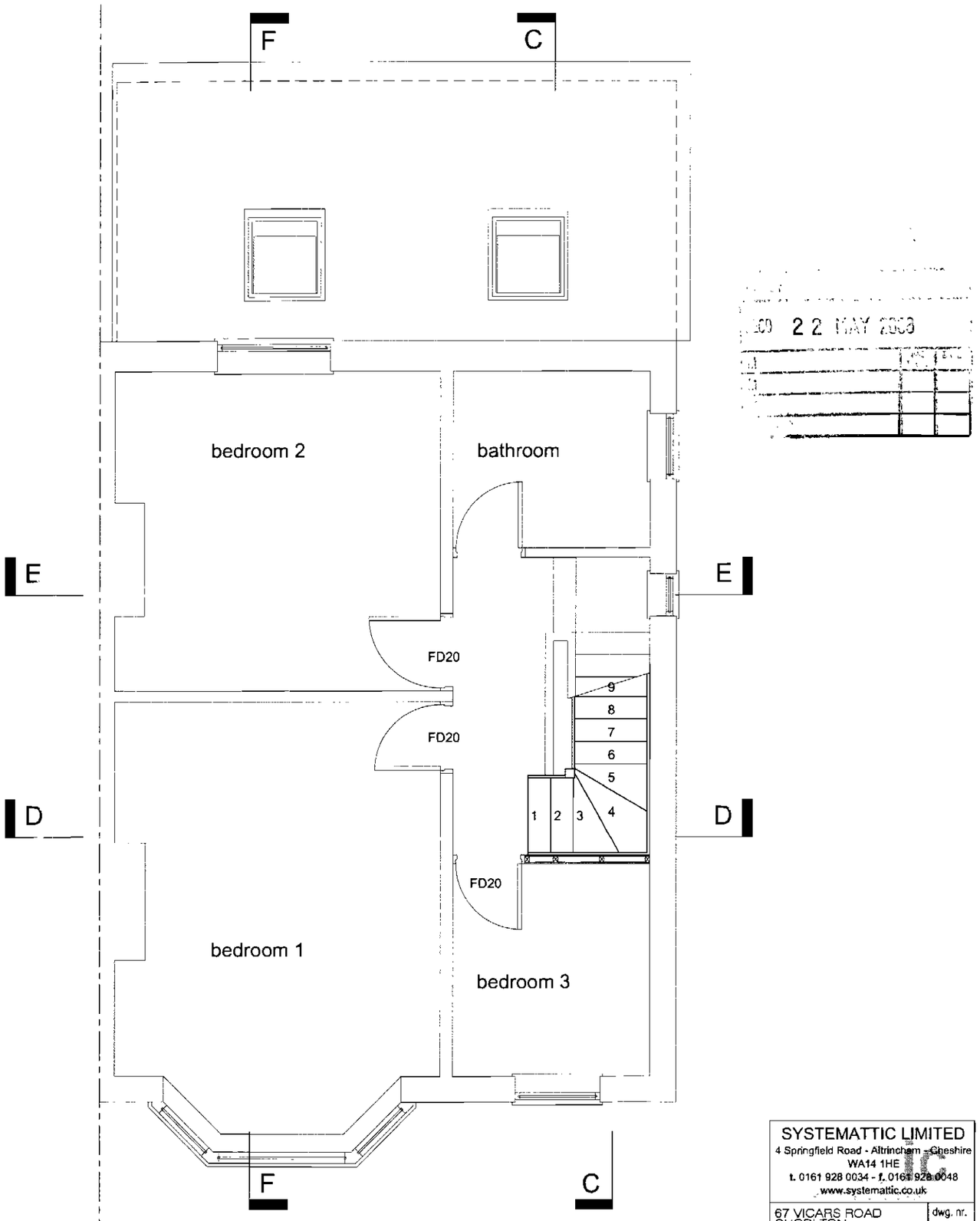

CO 22 MAY 2013

proposed first floor plan

All levels and dimensions must be checked on site by building contractor prior to commencement of works. Any variations must be reported to Systemattic Limited. All information hereon in is the copyright of Systemattic Limited. Copying in full or in part is forbidden without the written permission from Systemattic Limited.

1:100 10 m
1:50 5 m
1:20 2 m

SYSTEMATTIC LIMITED
4 Springfield Road - Altrincham - Cheshire
WA14 1HE
t. 0161 928 0034 - f. 0161 928 0048
www.systemattic.co.uk

67 VICARS ROAD
CHORLTON
MANCHESTER

dwg. nr. 05

PROPOSED FIRST FLOOR PLAN

scale	drawn	date	rev.
1:50	M.W.	08.05.12	A

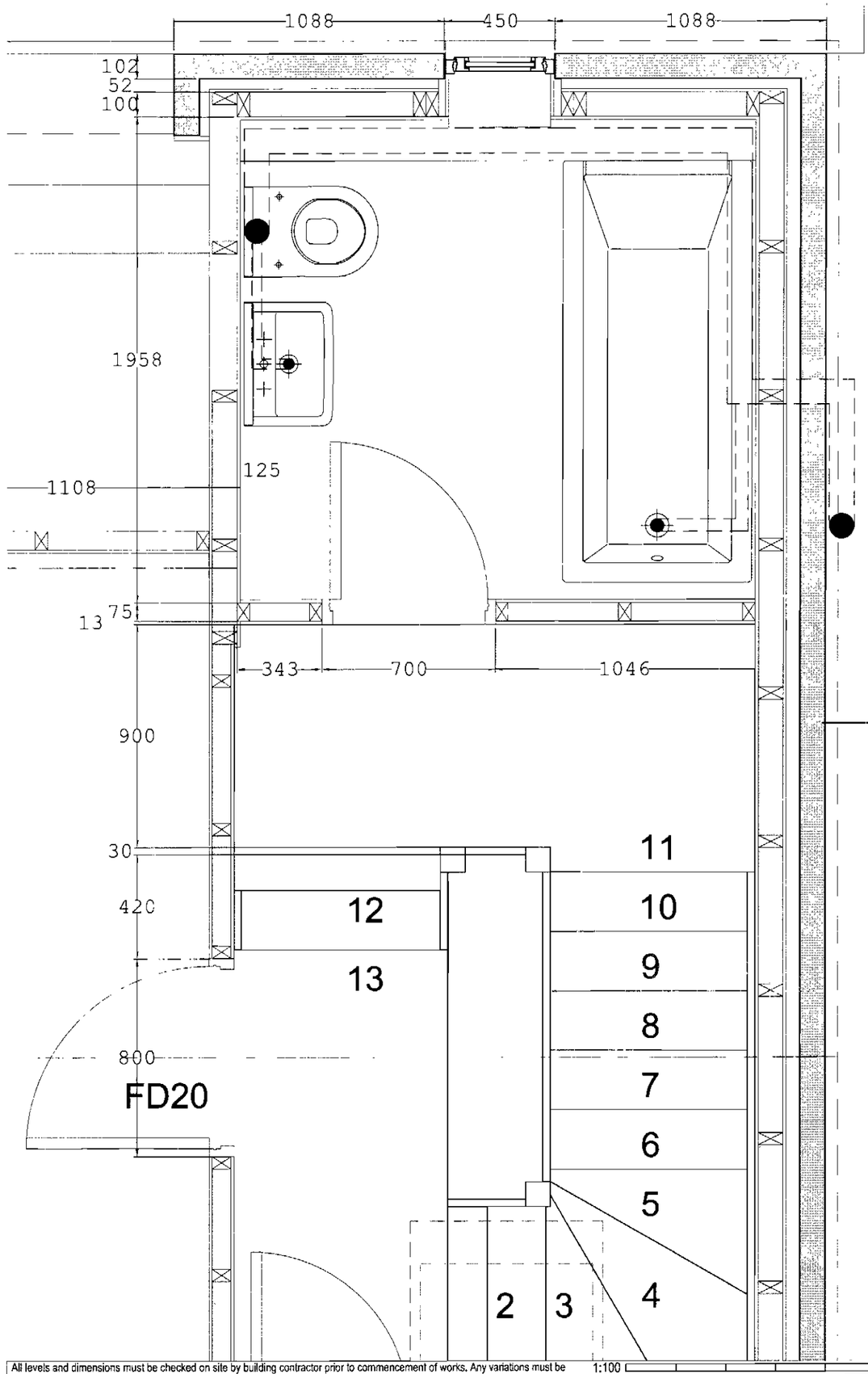

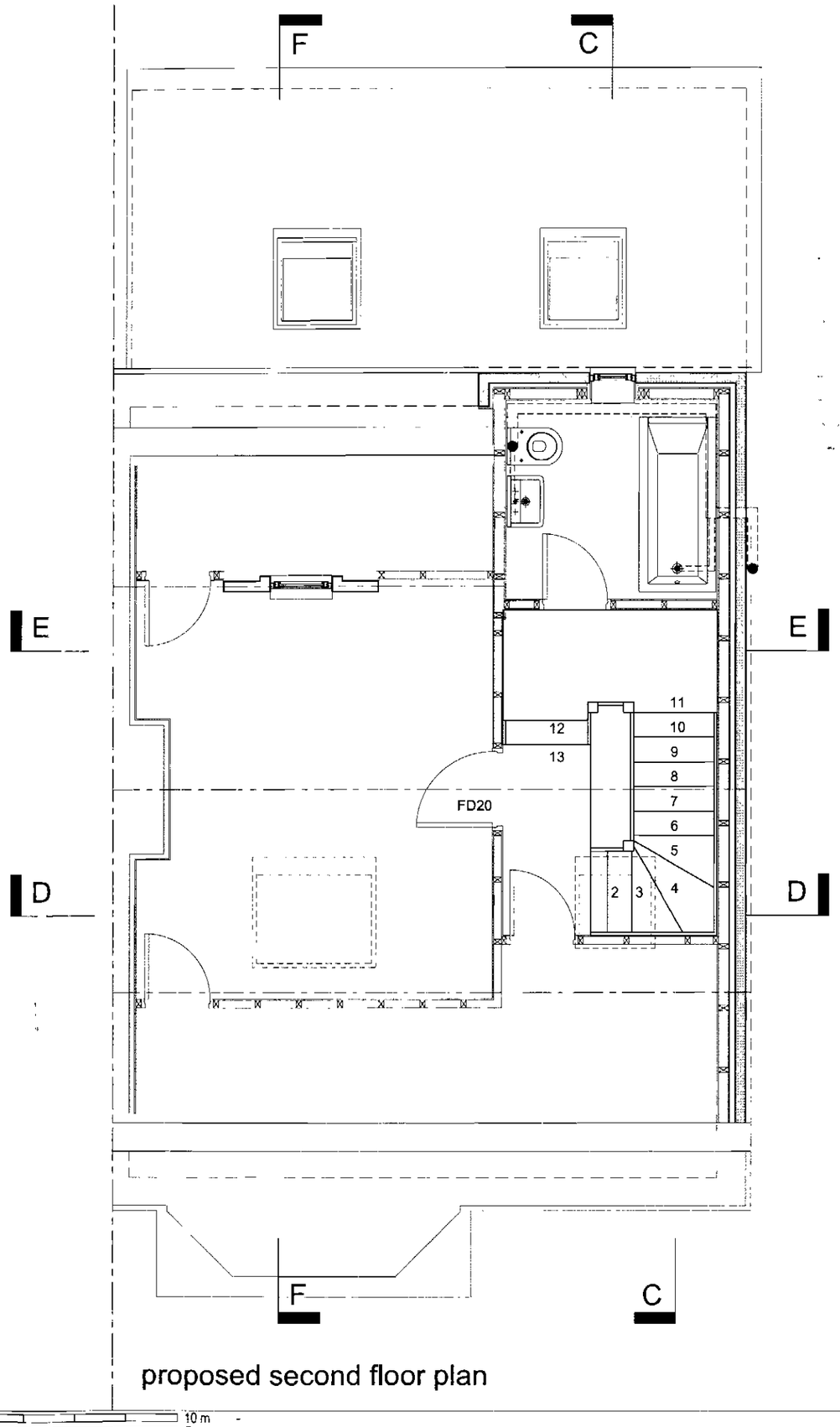

22 MAY 2008

proposed second floor plan

All levels and dimensions must be checked on site by building contractor prior to commencement of works. Any variations must be reported to Systemattic Limited. All information hereon in is the copyright of Systemattic Limited. Copying in full or in part is forbidden without the written permission from Systemattic Limited.

1:100 10 m
1:50 5 m
1:20 2 m

SYSTEMATTIC LIMITED
4 Springfield Road - Altrincham - Cheshire
WA14 1HE
t. 0161 928 0034 - f. 0161 928 0048
www.systematic.co.uk

67 VICARS ROAD
CHORLTON
MANCHESTER

dwg. nr. 06

PROPOSED SECOND FLOOR PLAN

scale	drawn	date	rev.
1:50	M.W.	08.05.12	B