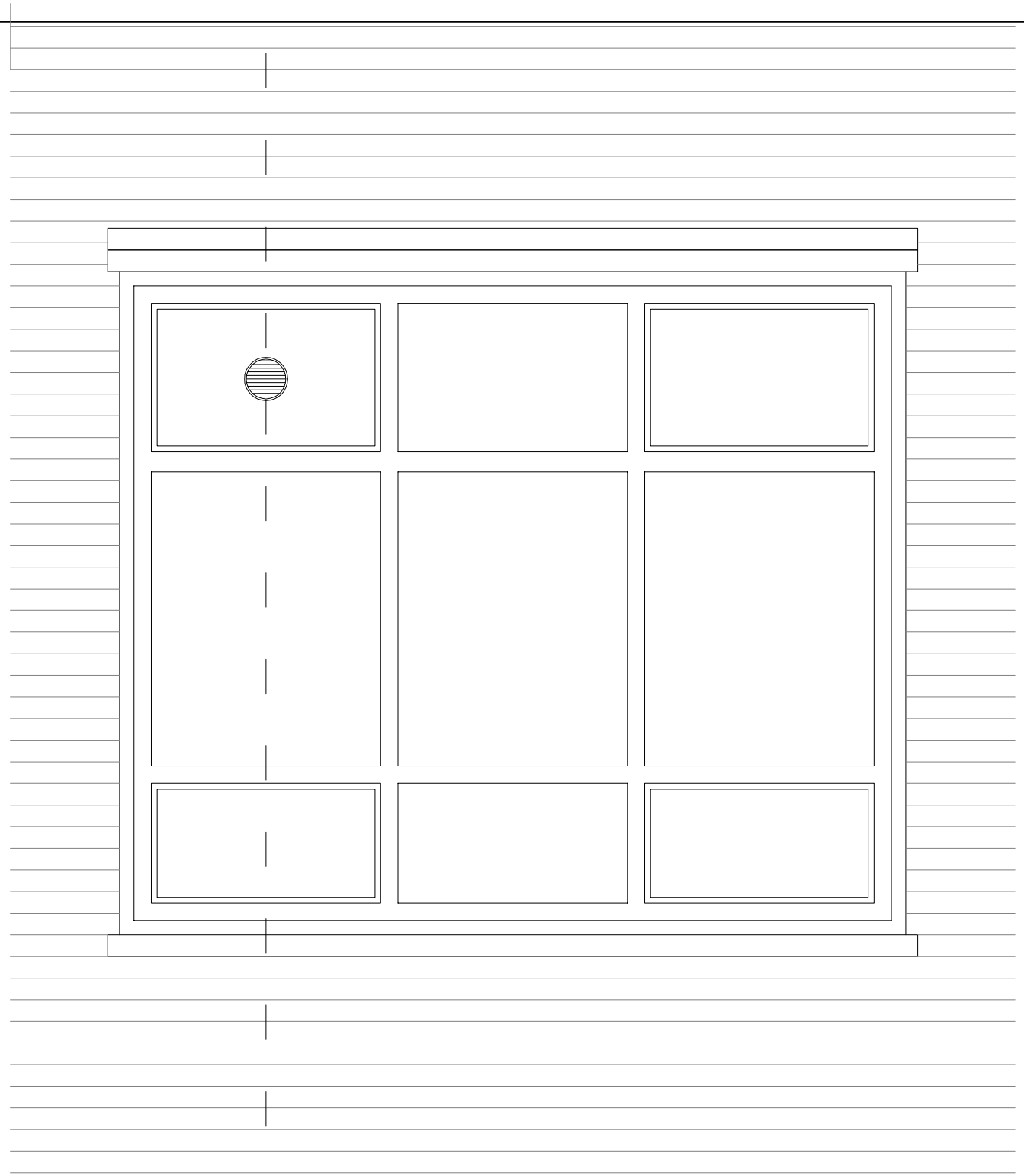

Elevation

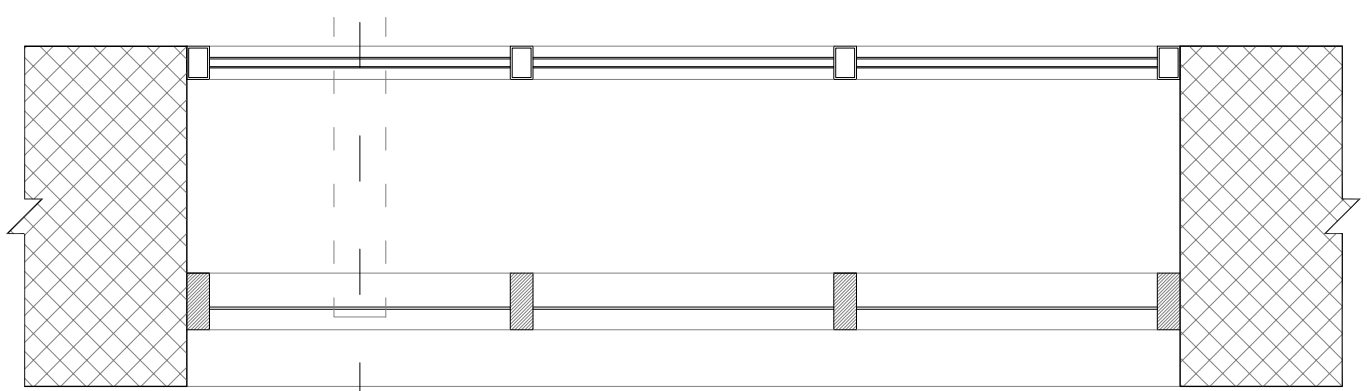

Plan

Section C

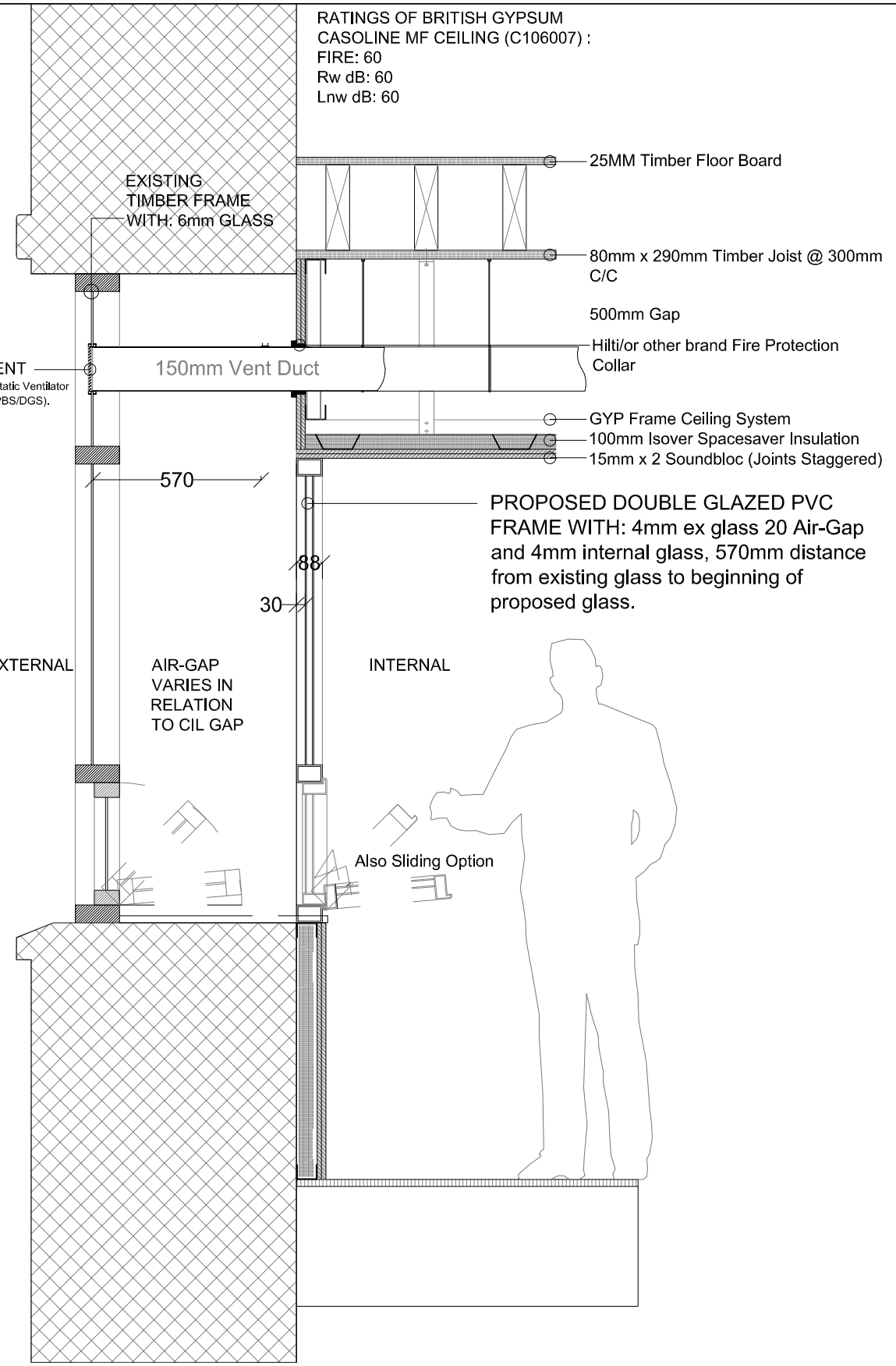

Window/Vent Section C

Scale 1:20 @ A3

Note Ceiling buildup may change in depending on location of window.

THESE PLANS AND DETAILS HAVE BEEN PREPARED FOR THE PURPOSE OF OBTAINING PLANNING ONLY.

THE CONTRACTOR IS TO CHECK AND CLARIFY ALL DRAWINGS, NOTES, DIMENSIONS, LEVELS, SPECIFICATIONS AND CONSTRUCTION PRIOR TO COMMENCING WORK ON SITE AND TO BRING TO THE CLIENT'S ATTENTION ANY VARIATIONS, OMISSIONS OR DEVIATIONS FOR CONFIRMATION.

WORKMANSHIP AND MATERIALS SHALL BE SUITABLE FOR THE PURPOSE THEY ARE USED FOR AND ARE TO COMPLY WITH THE BUILDING REGULATIONS, BRITISH STANDARDS AND CODES OF PRACTICE ETC.
THE CONTRACTOR SHALL TAKE INTO ACCOUNT EVERYTHING NECESSARY FOR THE PROPER EXECUTION OF THE WORKS AND TO THE SATISFACTION OF THE LOCAL AUTHORITY BUILDING INSPECTOR, WETHER OR NOT INDICATED ON THE DRAWINGS.

ALL LINES AND LEVELS, INVERT DEPTHS ETC OF ALL DRAINAGE ARE APPROXIMATE AND ARE TO BE CONFIRMED AND VERIFIED BY THE CONTRACTOR.

ALL ELECTRICAL WORK IS TO BE IN ACCORDANCE WITH PART P OF THE BUILDING REGULATIONS. THE INSTALLATIONS ARE TO BE DESIGNED, INSTALLED AND TESTED BY COMPETENT PERSONS CAPABLE OF ISSUING A CERTIFICATE ON COMPLETION OF THE WORK. ALL HEATING / PLUMBING WORK TO BE EXECUTED BY A QUALIFIED GAS SAFE ENGINEER.

WHERE APPROPRIATE, IT IS THE CLIENT / OWNER'S RESPONSIBILITY TO SERVE NOTICES ON THE ADJACENT / ADJOINING NEIGHBOURS FOR THE PROPOSED WORKS UNDER THE PARTY WALL ACT 1996.

COPYRIGHT. THIS DRAWING AND DESIGN AND ALL THE INFORMATION CONTAINED THEREIN IN THE SOLE RIGHT OF **MV** ARCHITECTS AND REPRODUCTION IN ANY FORM IS FORBIDDEN ULESS PREMISSION IS OBTAINED IN WRITING.

REV:	AMENDMENTS:	DATE:	BY:
-	----	--/--/--	--
-	----	--/--/--	--
-	----	--/--/--	--
-	--	--/--/--	--

MVA
MVArchitects
t 07902 677 778
t 07902 677 771
www.mvarchitects.co.uk
e info@mvarchitects.co.uk

CLIENT :
MOHAMED DAYEH

PROJECT :
CEDAR HOUSE,
2 FAIRFIELD STREET,
MANCHESTER.

DRAWING :
007_23 WINDOW SECTION C OPTION 1

REVISION :

DATE :
03.01.2012

DRAWN BY :
Tanveer M

1:20 @ A3