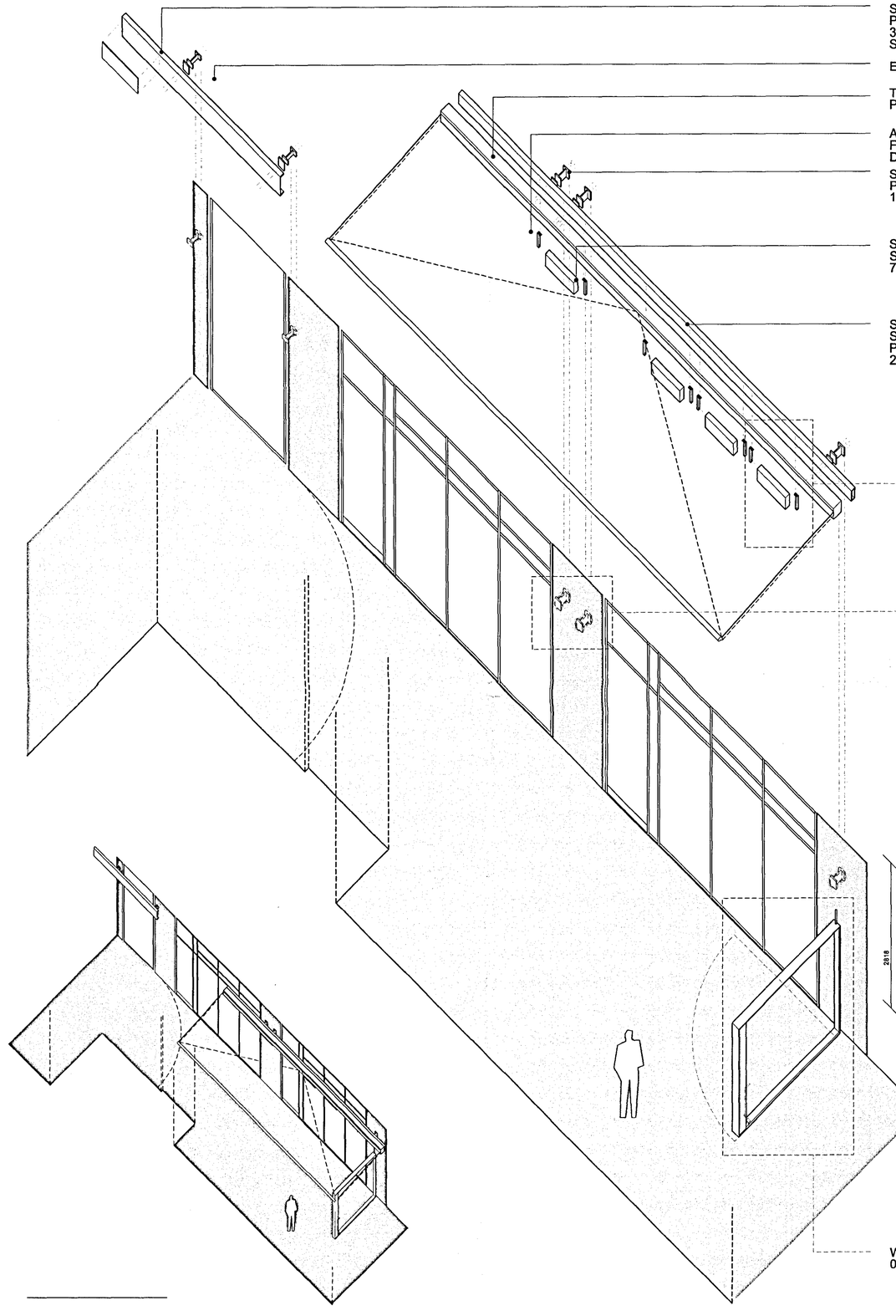

Constructed Axonometric
1:125 @ A1

Exploded Axonometric
1:50 @ A1

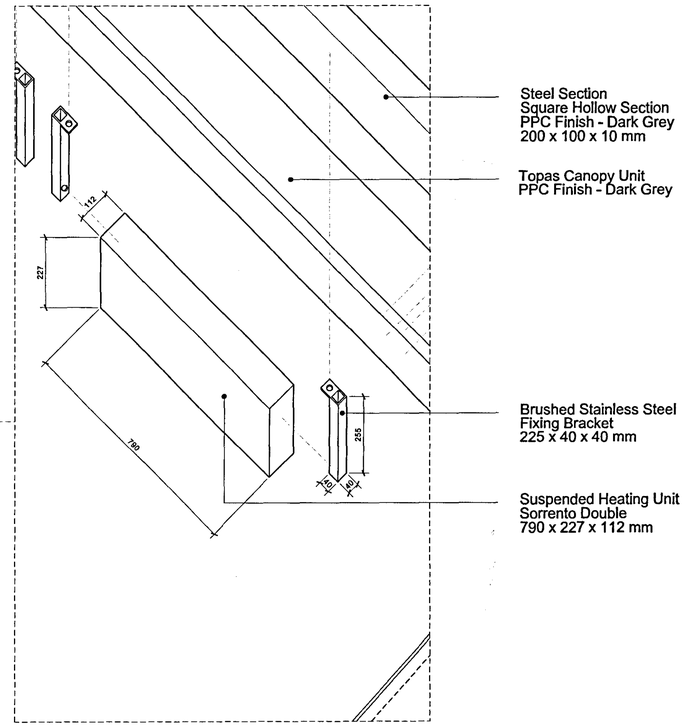

Suspended Heating Unit Detail
1:10 @ A1

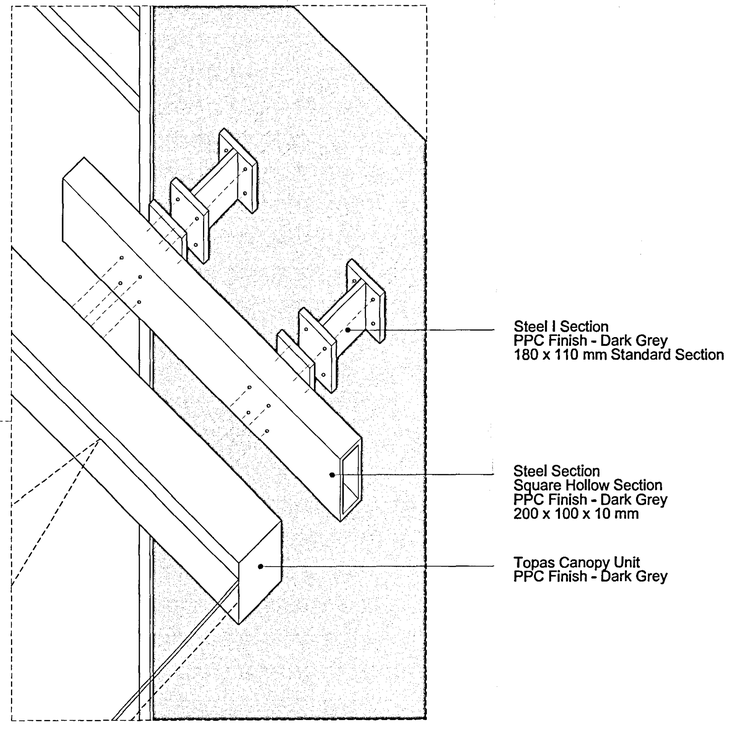

Wall Fixing Detail
Exploded Axonometric
1:10 @ A1

Copyright of this drawing is vested in Sylvia Architect and it must not be copied or reproduced without written consent. Figured dimensions only are to be taken from this drawing. DO NOT SCALE OFF THIS DRAWING ___ IF IN DOUBT ASK.

All contractors must visit the site and be responsible for taking and checking all dimensions relative to their work. Sylvia Architects are to be advised of any variation between drawings and site conditions.

Electronic drawing issued as 'read only' and should not be interrupted for measurement. All dimensions and levels should be 'read only' from those values stated in text, on the drawings.

KEY PLAN:

PLANNING AND BUILDING CONTROL
21 MAY 2013

REV:	DATE:	DETAILS:

5plus architects

5th Floor
Grange House
17-27 John Dalton Street
Manchester
M2 6FW
+44 (0)161 834 0552
www.5plusarchitects.com

PROJECT:
Hive Canopy

TITLE:
Canopy Detail Drawings
General Axonometric

SCALE	DATE:	DRAWN:	CHECKED:
Varies @ A1	20.05.13	PJE	JC

STATUS:
PLANNING

DRAWING NO: 05163B B1_01_001
REV: -

Architecture | Masterplanning | Interiors | Graphics | Branding

Copyright of this drawing is owned in 5plus Architects and it must not be copied or reproduced without written consent. Figured dimensions only are to be taken from this drawing. DO NOT SCALE OFF THIS DRAWING ..... IF IN DOUBT ASK!

All contractors must visit the site and be responsible for taking and checking all dimensions relative to their work. 5plus architects are to be advised of any variation between drawings and site conditions.

Electronic data/ drawings issued as 'read only' and should not be interfered for measurement. All dimensions and levels should be 'read only' from those written stated in text, on the drawings

KEY PLAN:

NB - Crown; who are currently providing the canopy unit, also offer their own wind break unit as an off-the-shelf item.

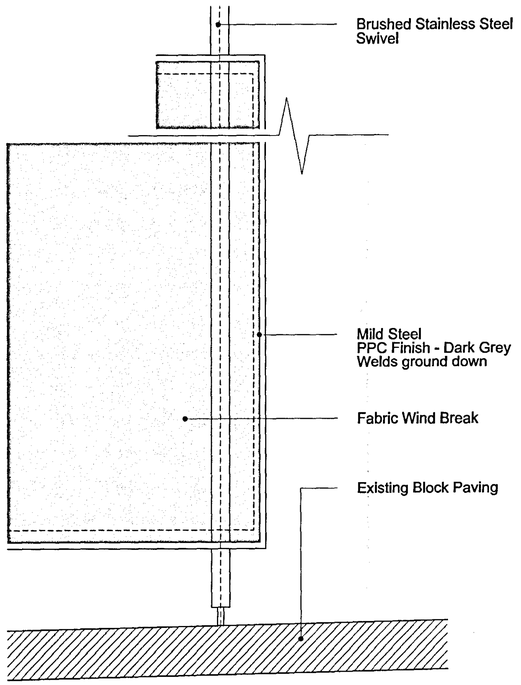

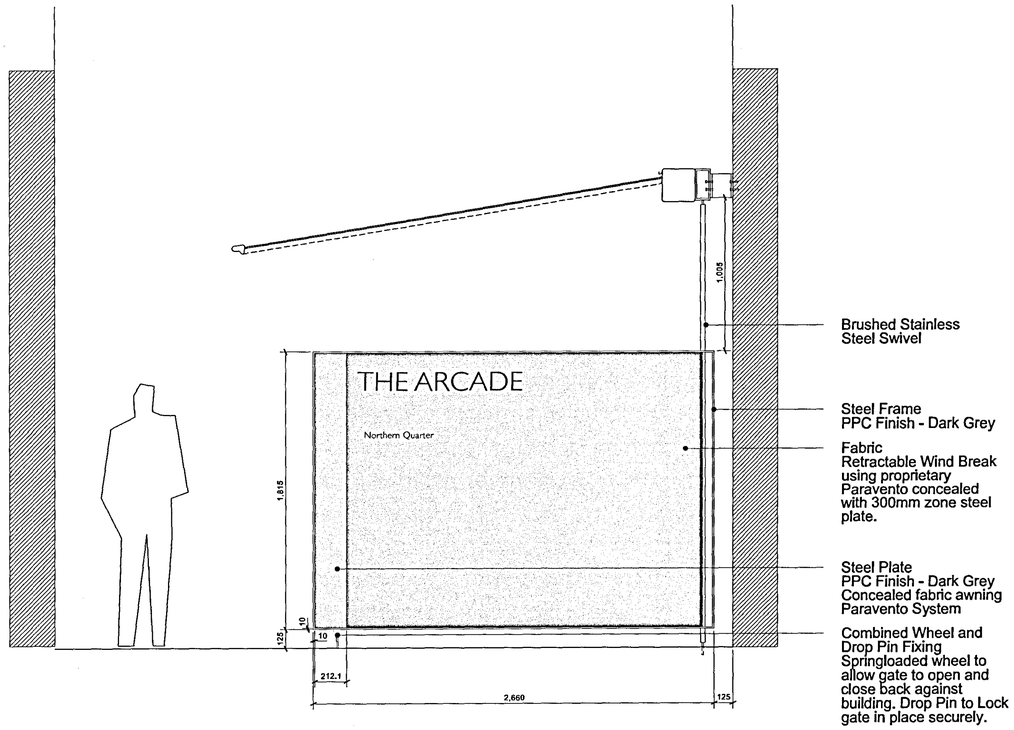

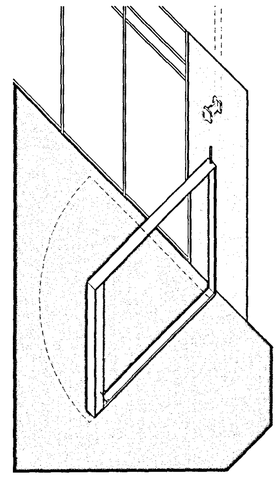

Bespoke Wind Breaker
Axonometrics 1:50 @ A1

Bespoke Wind Break
Section 1:5 @ A1

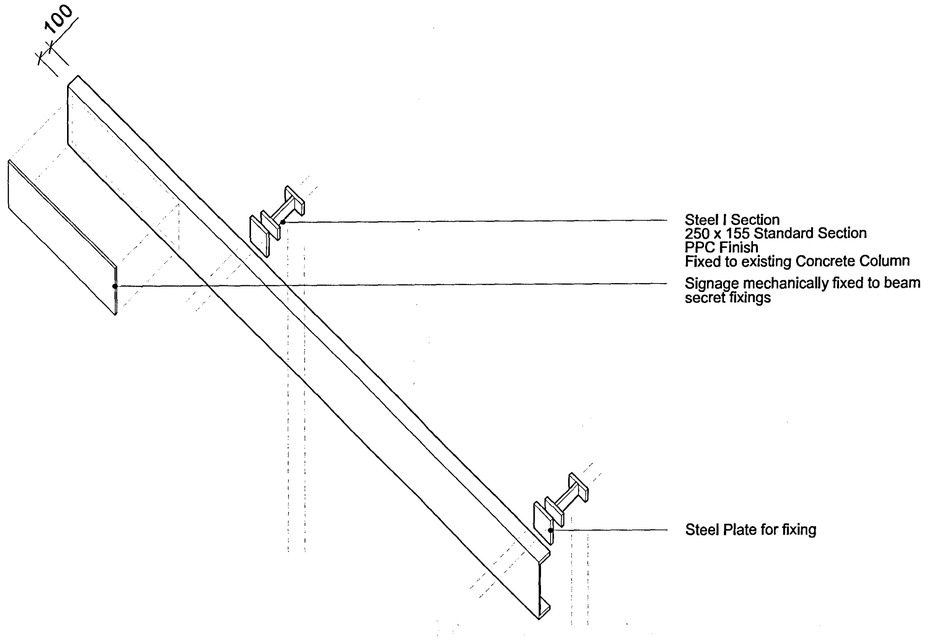

Arcade Signage
Exploded Axonometric 1:20 @ A1

Bespoke Wind Break
Elevation 1:20 @ A1

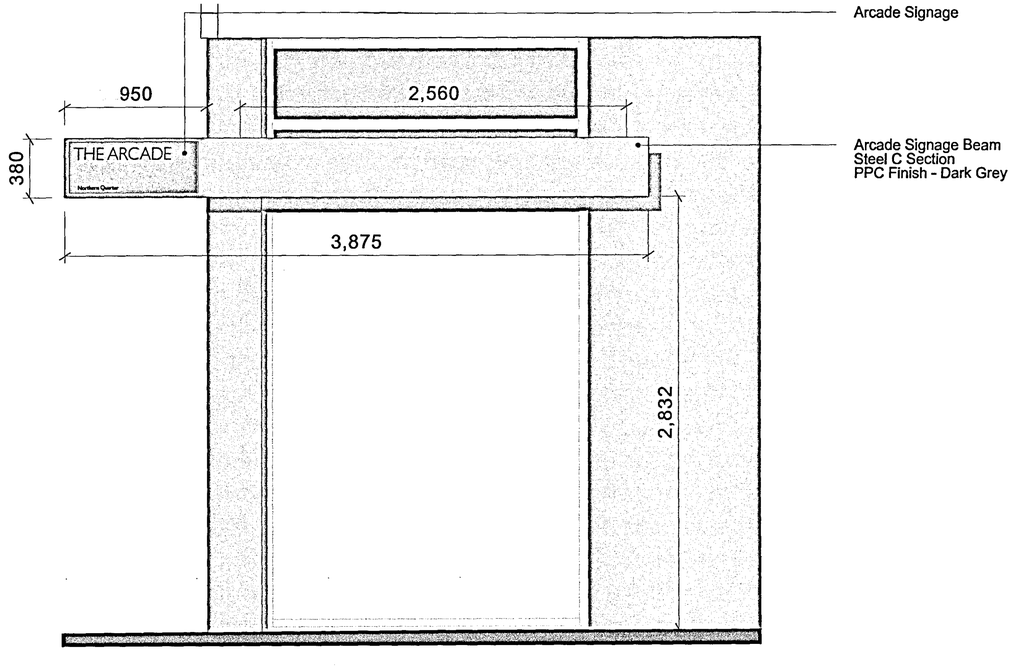

Arcade Signage
Elevation 1:20 @ A1

PLANNING AND BUILDING CONTROL
21 MAY 2013

REV:	DATE:	DETAIL B:

5plus architects
5th Floor
Grange House
17-27 John Dalton Street
Manchester
M2 6FW
+44 (0)161 834 0552
www.5plusarchitects.com

PROJECT:
Hive Canopy

TITLE:
Canopy Detail Drawings
Wind Break and Signage

SCALE:	DATE:	DRAWN:	CHECKED:
Varies @ A1	20.05.13	PJE	JC

STATUS:
PLANNING

DRAWING NO: 05163B B1_01_002

REV: -