Silicone joints with wet sealing

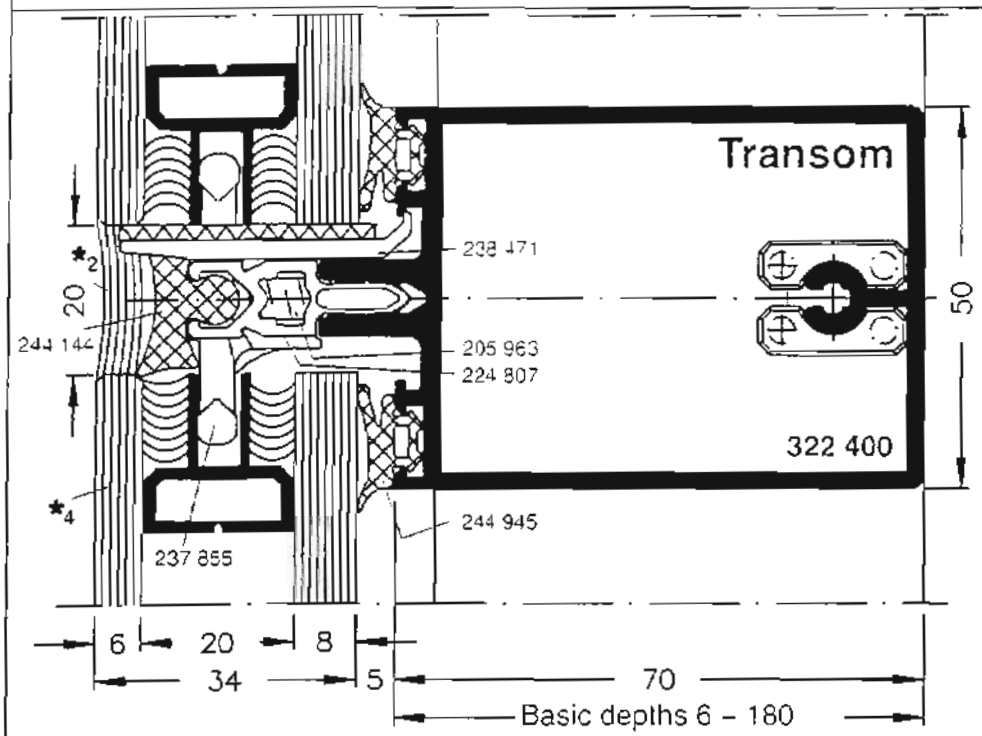

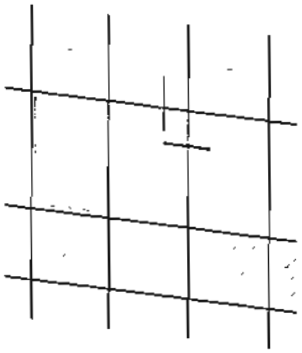

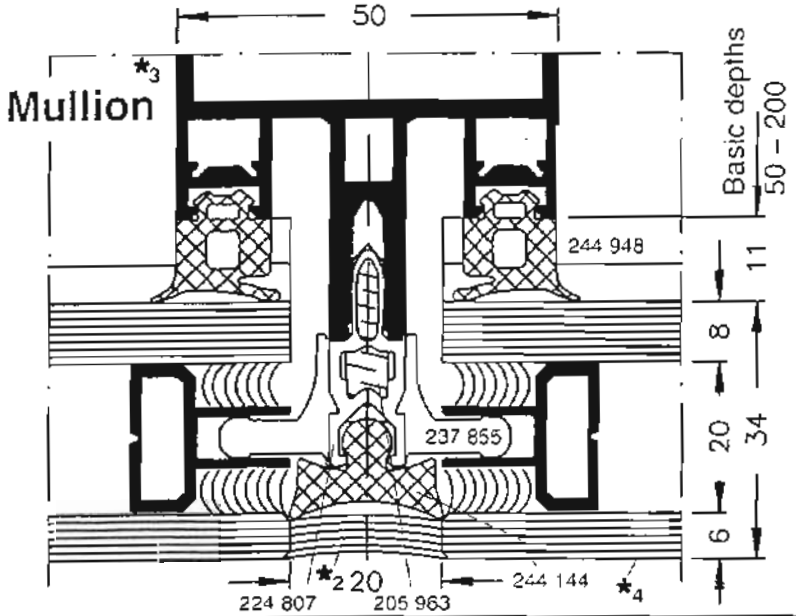

PLANNED
ACK'D
REPLIED
RECD 04 APR 2008
M
M
M
FOIL ACTION

★ For further details, see the "Fabrication and glazing information" section.

Profiles

Description	Art. No.	Stock length
Transom (level 1)	322 400	6.0 m

T-cleats

Description	Art. No.	PU
T-cleat (S) screw-type	226 081	50
T-cleat (S) for CNC use screw-type	226 155	50
Screw	205 082	100

Gaskets and Accessories

Description		Art. No.	PU m
Glazing gasket, inner	5 mm	244 945	100 m
Glazing gasket, inner	11 mm	244 948	
For vulcanised gasket frame (gasket combination 5 / 11 mm), see accessories.			
Gasket corners for 244 945 / 244 948	5 / 11 mm	244 957	20
Joint seal		244 144	200 m
Glazing support		238 471	50
Glazing clip	2-page spread	237 855	100
Isolator	17 mm	224 807	10 x 6 m bars
Special screw A2	ST 5.5x23.5	205 963	100

For more information, see subchapter: Profiles | Profiles and T-cleats | Glazing options, Gaskets and Accessories

System	SERIES 48 CURTAIN WALLING
Title	Isometric Mullion To Transome Connection Detail

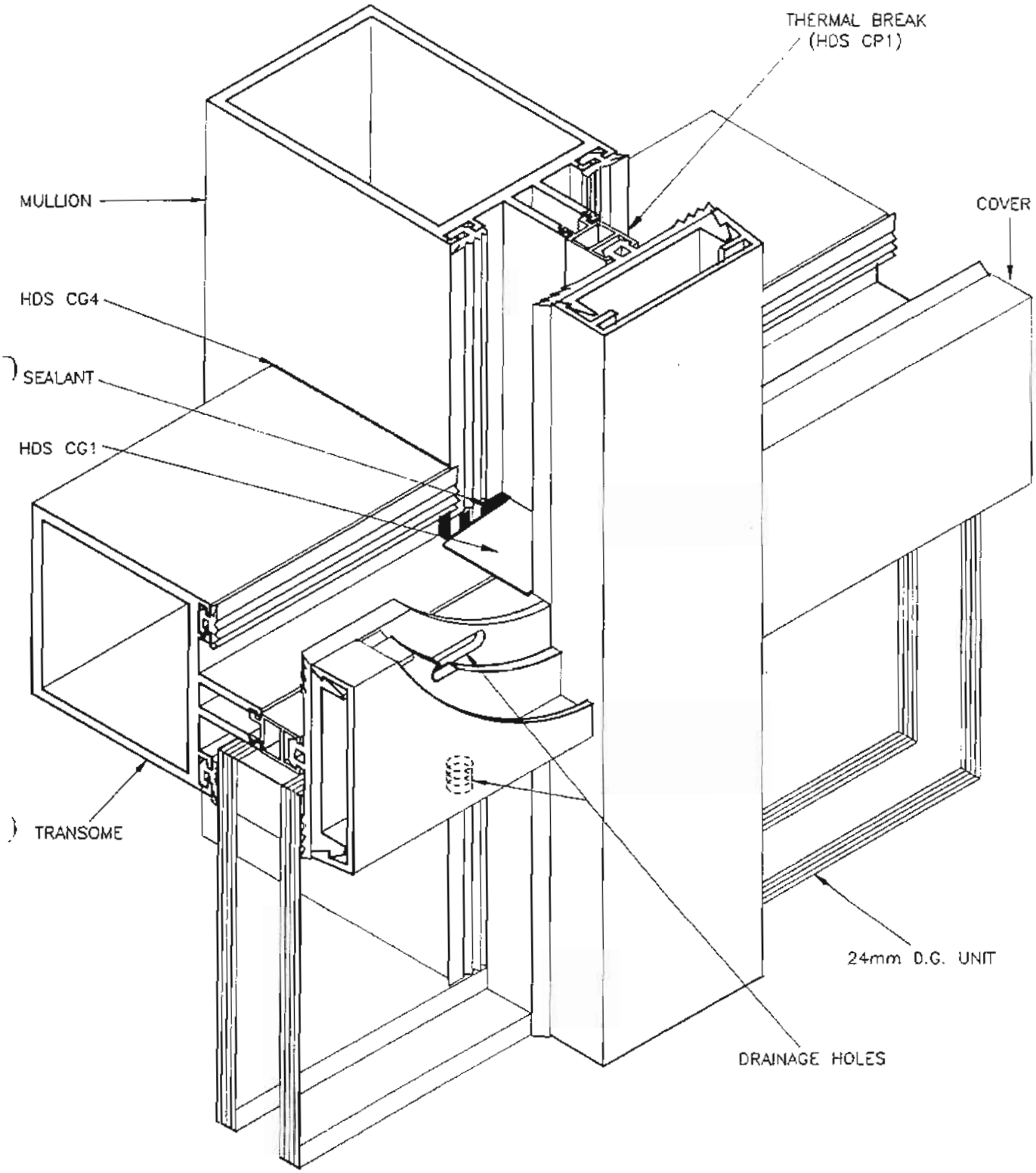

Drg.No. CW/23	Scale NTS	Date JAN 96