House Wall

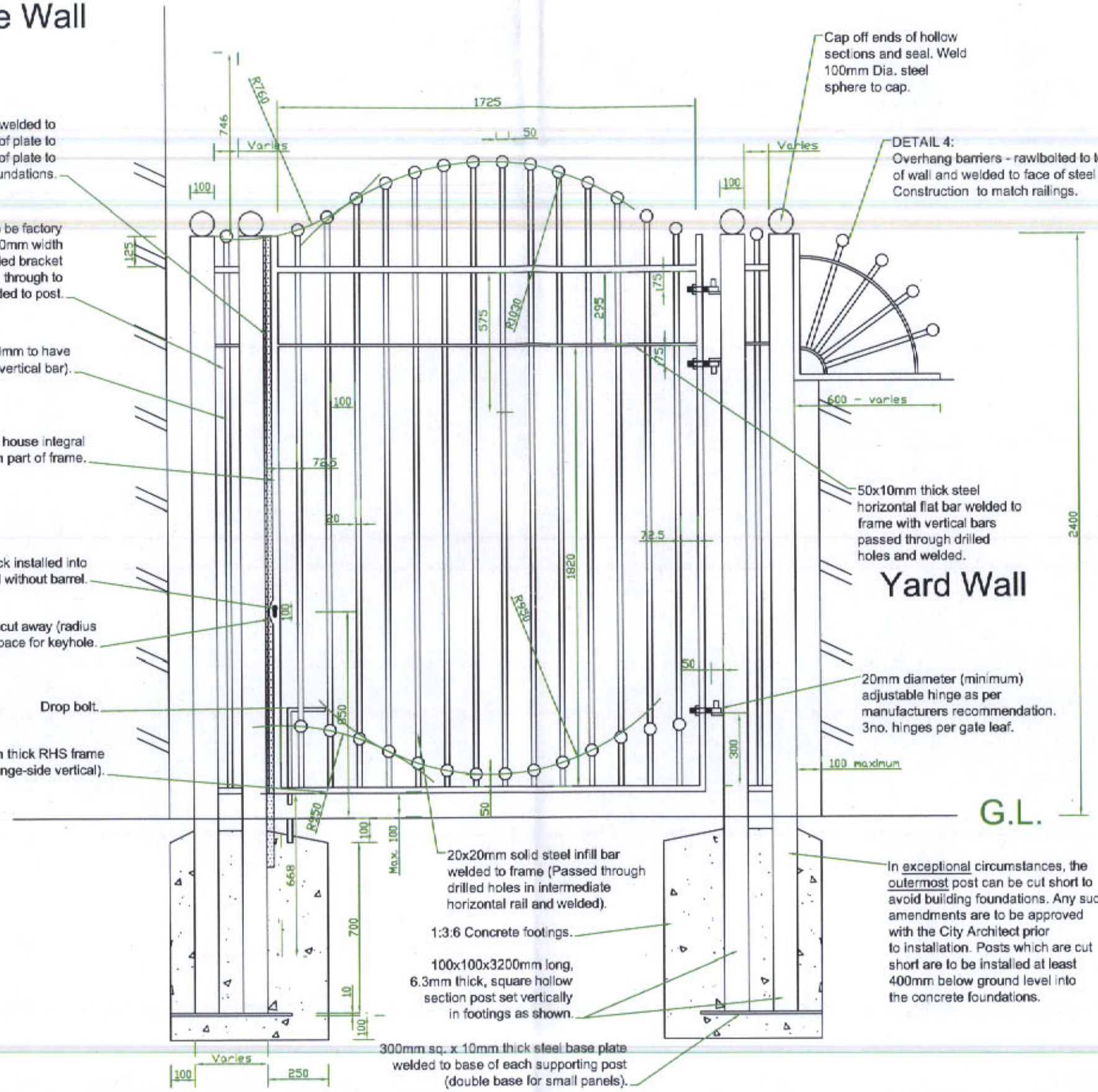

Yard Wall

FENCING NOTE

Fence panels to be designed in same style as gate side panels, attached to post by welded bracket security bolted (using shear nuts) through to matching bracket welded to post. Posts to be same Spec. as gate posts. Fence panels over 1500mm length to be supported by 50x10mm central supporting lug welded to bottom member and installed in concrete foundations.

No fence panel to exceed 2750mm width unless stated otherwise on the elevation drawings.

NOTES

1. WELDING:
All welds to be continuous seam or fillet welds. Any irregularities to be ground down prior to galvanising.

2. GALVANISING:
All fabricated steelwork to be hot-dipped galvanised to BS 1461.

All steel surface shall be free of any slag, spatter or grease.

3. PAINTING:
All galvanised surfaces to be degreased using Dacrylate Thinner 'R5'. The material shall then be treated with Dacrylate Mordant Solution (T Wash) and then painted without delay with the following system:

Dacrylate Vinadac HB MIO, ref: 41-line, to an approximate wet film thickness of 190 microns to achieve a dry film thickness of 75 microns
(Colour: 41-177 (Matt Black)).

4. The Contractor should satisfy himself to the accuracy of all measurements shown in relation to existing features.

NOTE: These gates have been designed in consultation with 'Crime and Disorder' team.

SITE:
Alleyway Security Contracts

TITLE:
Single Leaf Gate Detail

DWG No.	SCALE:	DATE:
HTS / AS / 01 / 1	nts	03 Nov. 2003

Manchester Housing Tech Services
Parkside Office
Sheepfcot Lane
Prestwich
Manchester
M25 0BW
Tel: 0161 740 0289
Fax: 0161 720 7211

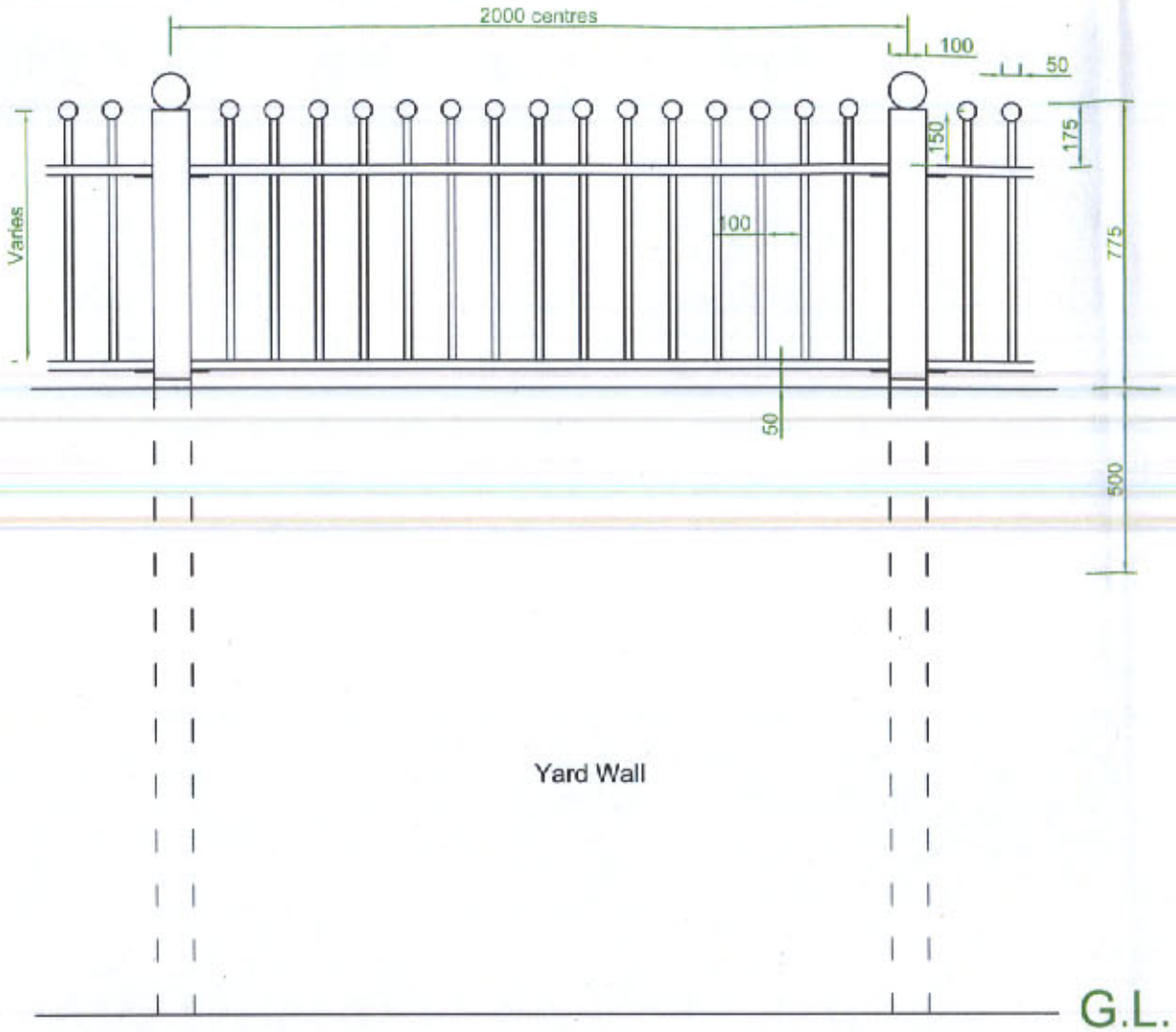

Detail 7

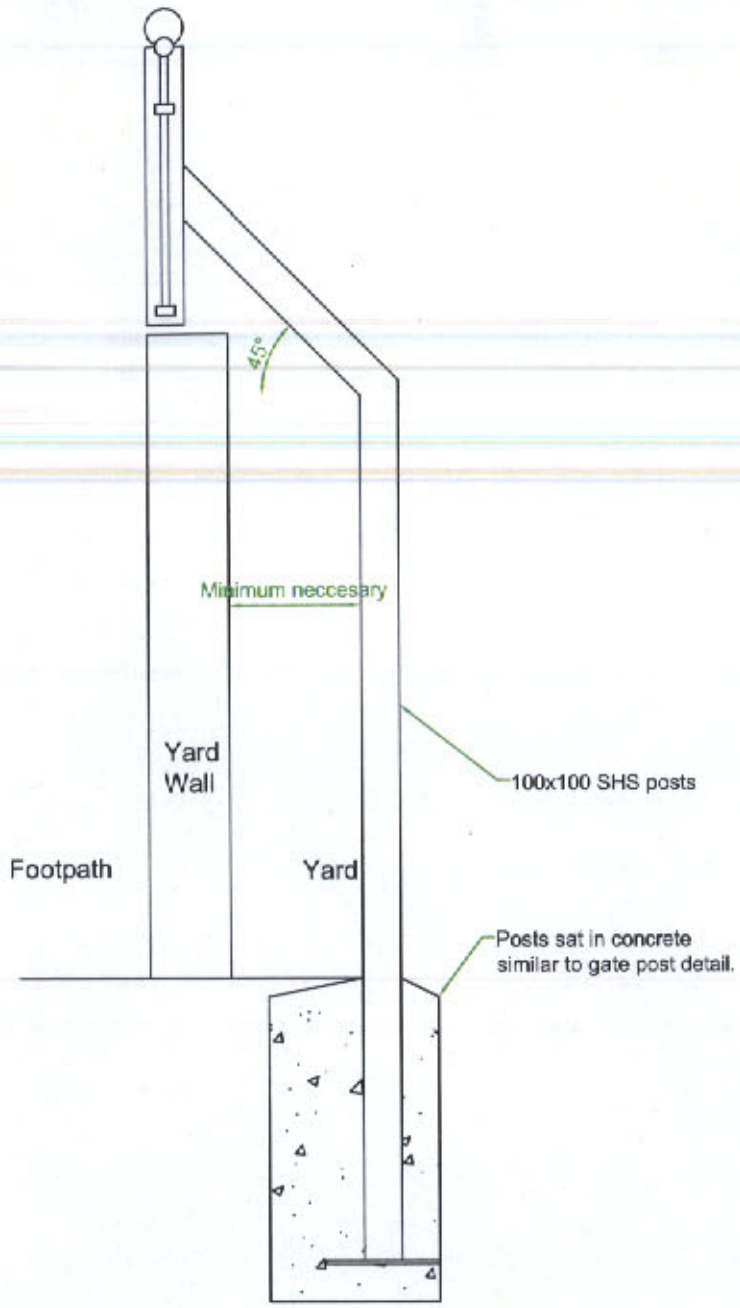

Fence panels attached to posts by welded bracket security bolted through to matching bracket welded to SHS posts.

Detail 5

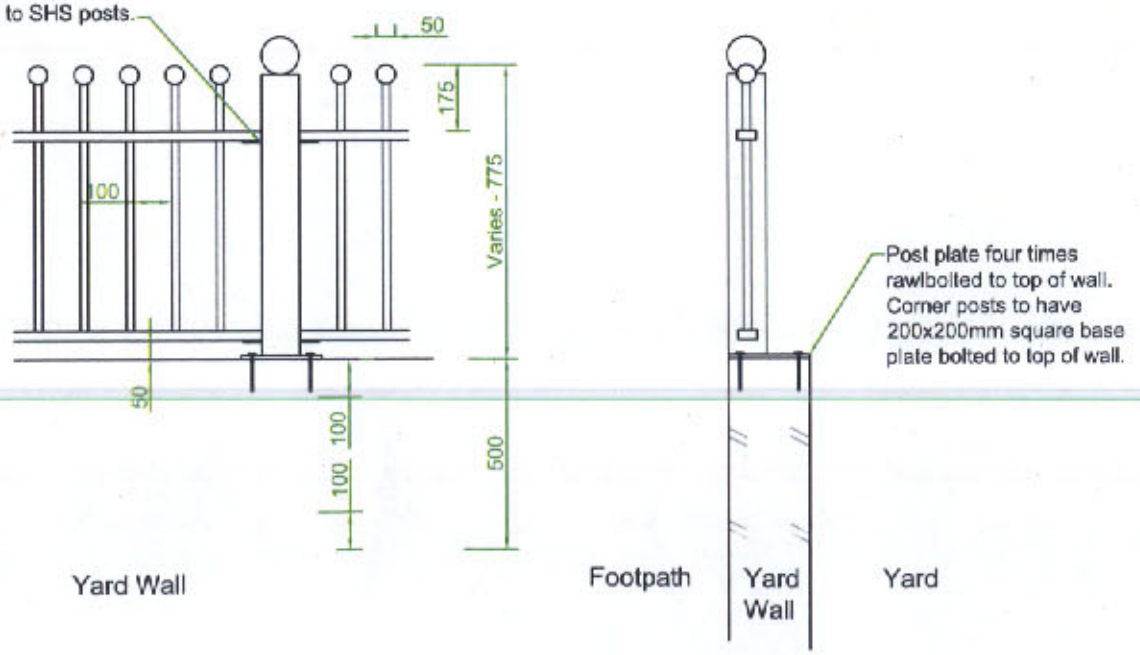

Detail 6

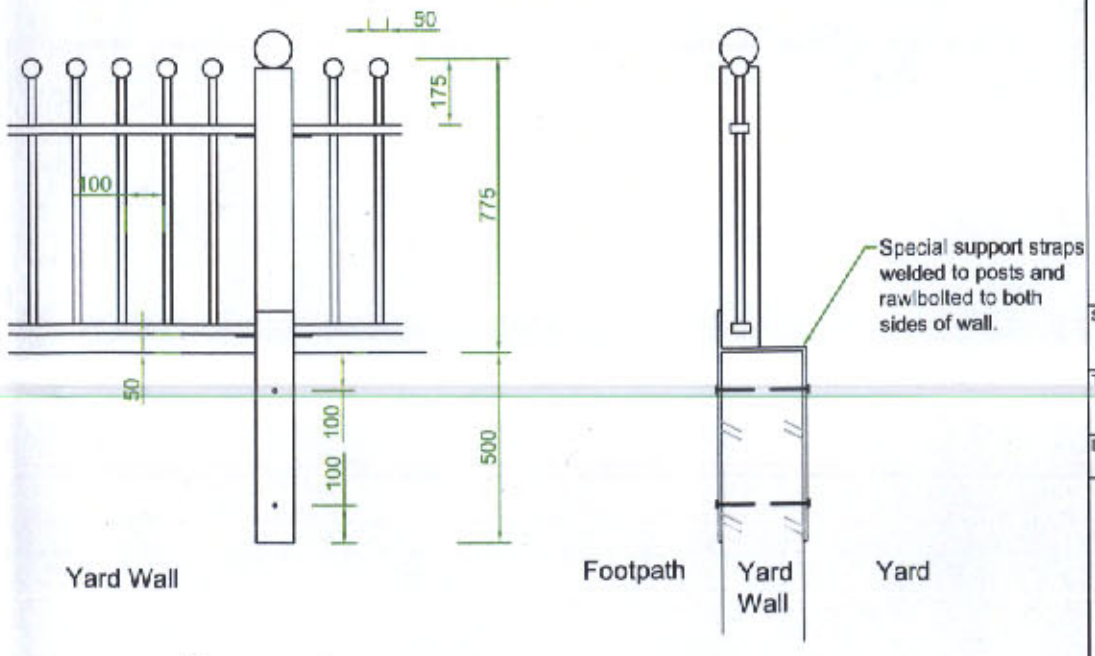

NOTES

1. WELDING:
All welds to be continuous seam or fillet welds. Any irregularities to be ground down prior to galvanising.

2. GALVANISING:
All fabricated steelwork to be hot-dipped galvanised to BS 1461.

All steel surface shall be free of any slag, spatter or grease.

3. PAINTING:
All galvanised surfaces to be degreased using Dacrylate Thinner 'R5'. The material shall then be treated with Dacrylate Mordant Solution (T Wash) and then painted without delay with the following system:

Dacrylate Vinadac HB MIO, ref: 41-line, to an approximate wet film thickness of 190 microns to achieve a dry film thickness of 75 microns
(Colour: 41-177 (Matt Black)).

4. The Contractor should satisfy himself to the accuracy of all measurements shown in relation to existing features.

SITE:
Alleyway Security Contracts

TITLE:
Fence Above Wall

DWG No.	SCALE:	DATE:
HTS / AS / 01 / 4	1:10	03 Nov. 2003

Manchester Housing Tech Services
Parkside Office
Sheepfoot Lane
Prestwich
Manchester
M25 0BW
Tel: 0161 740 0289
Fax: 0161 720 7211

Welded Mesh panel fencing

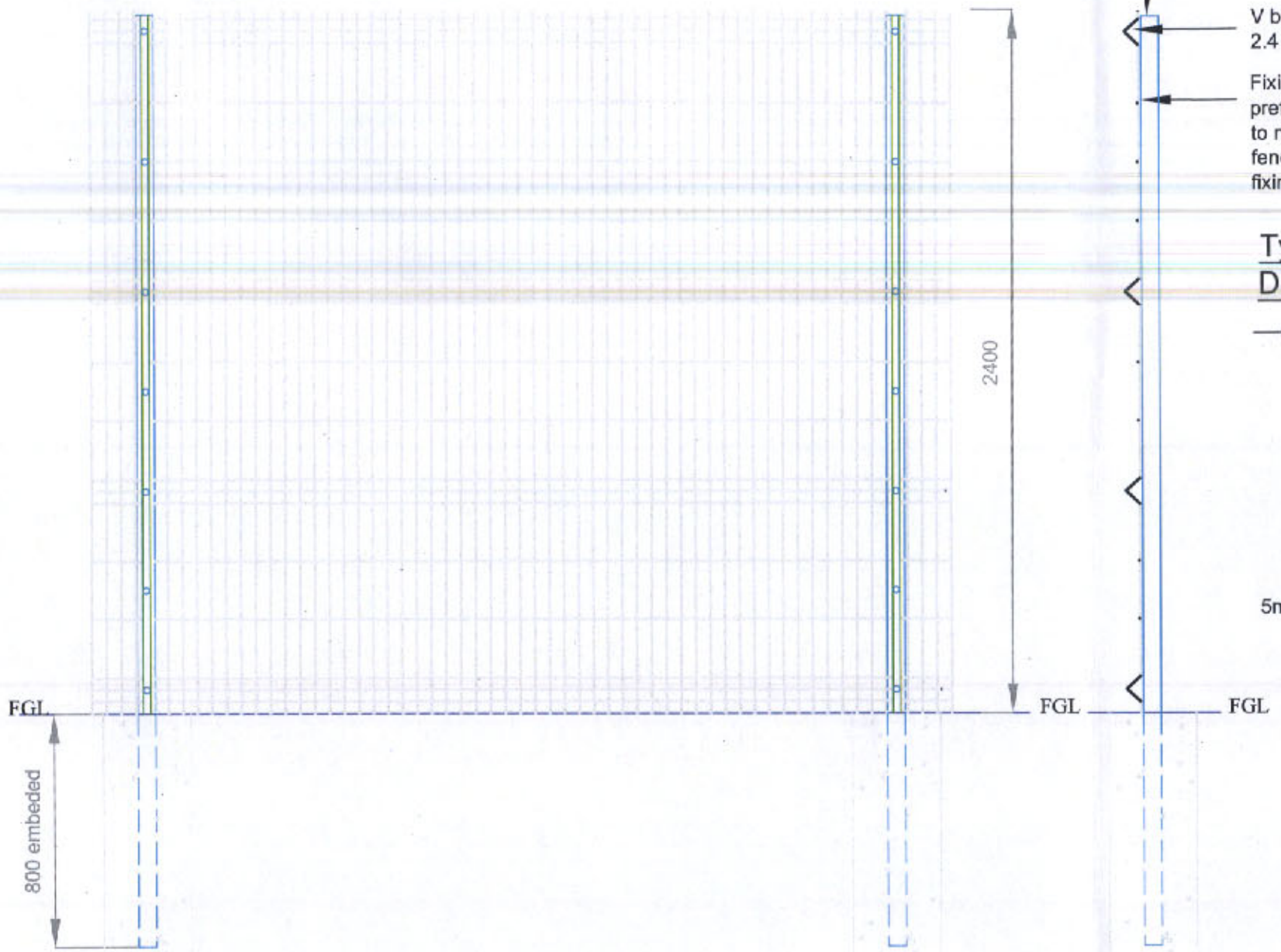

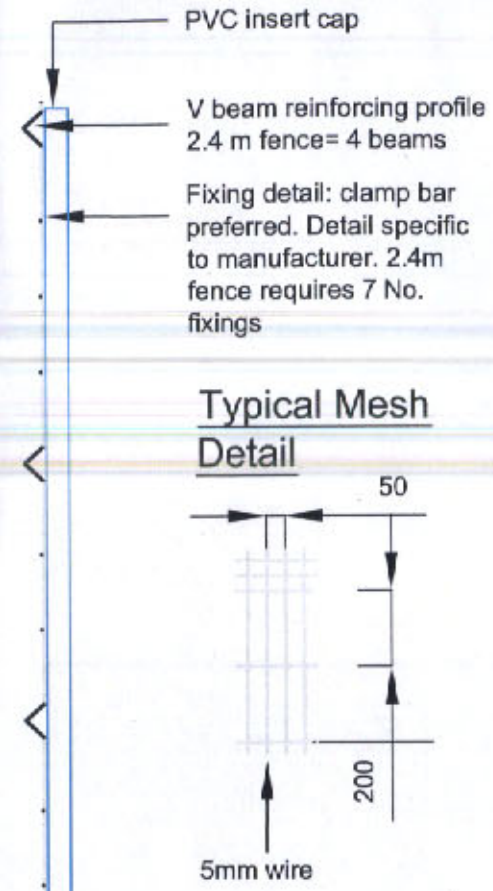

Typical Mesh Detail



Finish: Galvanised to BS EN 1461 & Polyester powder coated in colour Black to match gates

panel sizes for 2.4m high fence specific to manufacturer

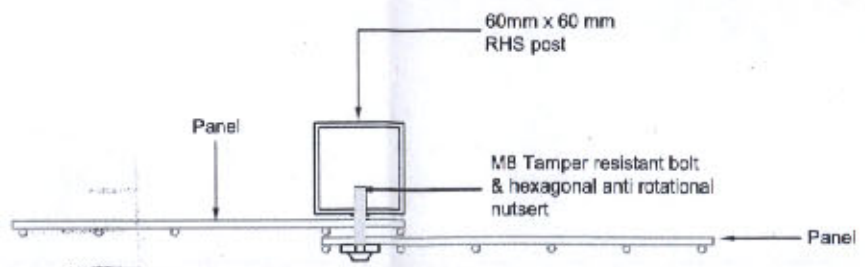

Standard intermediate post configuration-Scale 1:5

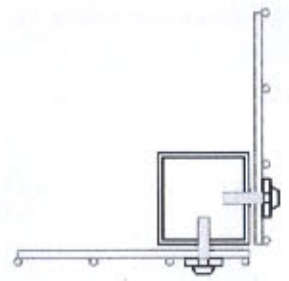

Standard corner post configuration Scale 1:5

28 FEB 2008

Northwards Housing
North Manchester's Council Homes

Northwards Housing Property Services
Parkside Office,
Sheepfoot lane,
Prestwich, Manchester, M25 0BW
Tel: 0161 740 0289
Fax: 0161 720 7211

Project: Alley gating

DRAWING No. AG1 | HOUSE TYPE: N/A

DRAWING TITLE: welded mesh panel fencing

Scale: 1: 20/ 1:5 | Date: Sept 2007 | Drawn By: LT

Signatures

Tenant: _ _ _ _ _

Technical Surveyor: _ _ _ _

M & E Surveyor: - - - - - - - - - - - - - - - - -

Date Agreed: - - - - - - - - - - - - - - - - - -