This drawing must not be scaled. Discrepancies are to be reported to the Architect immediately.
All dimensions to be checked from site. All information to be subject to full site surveys.
This drawing or any portion of it may not be reproduced in any way without the consent of the Architect.

REV.	DETAILS	BY	DATE

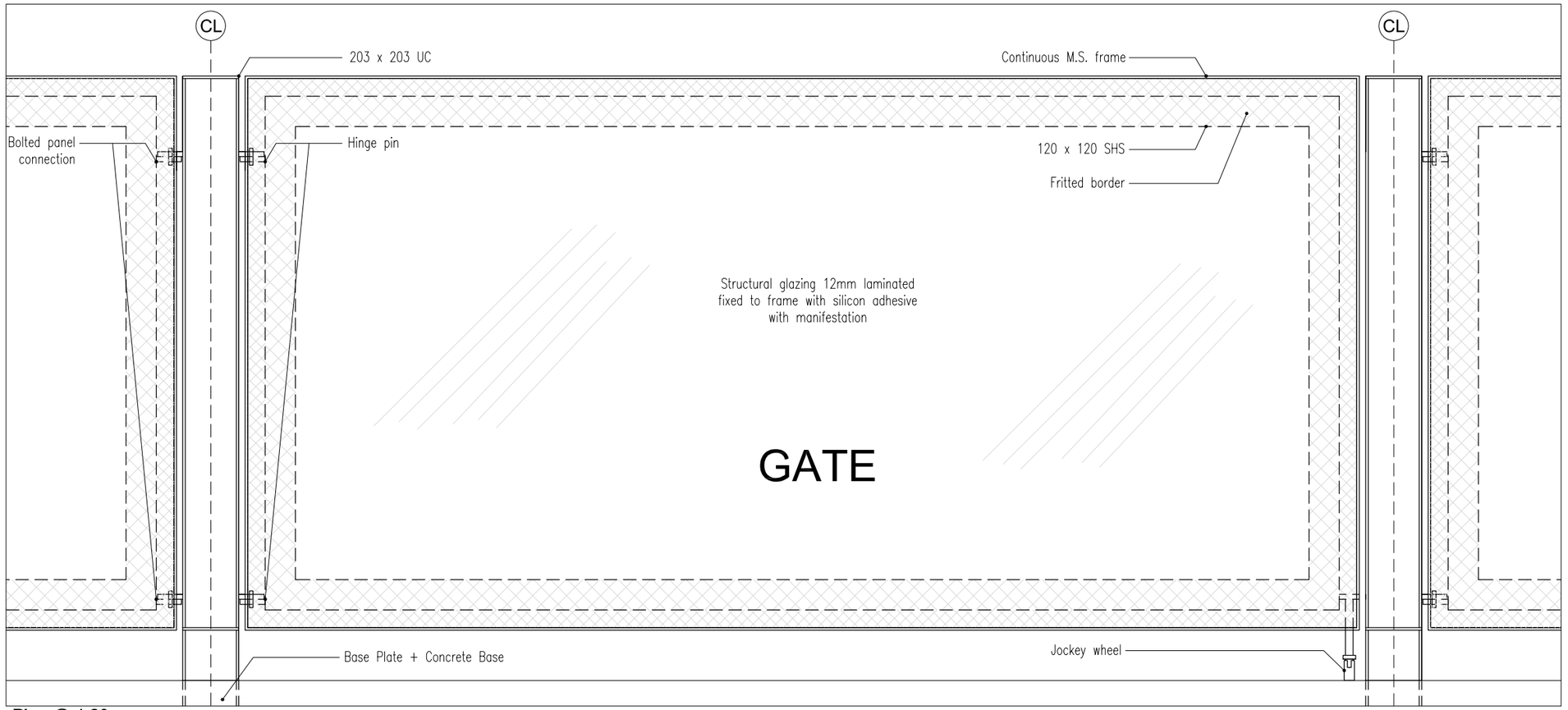

Plan @ 1:20

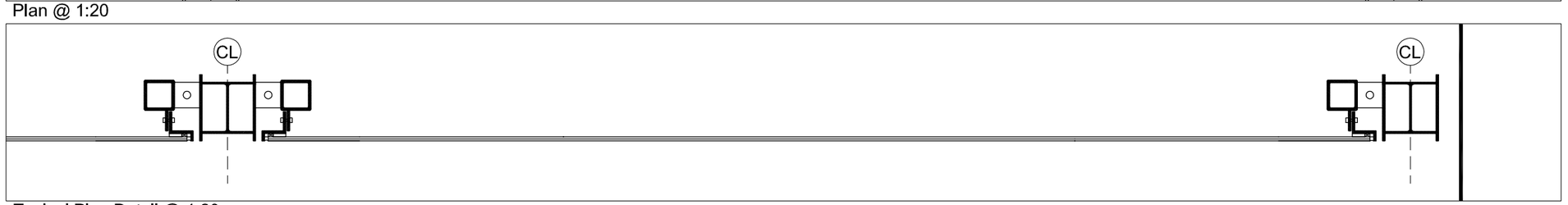

Typical Plan Detail @ 1:20

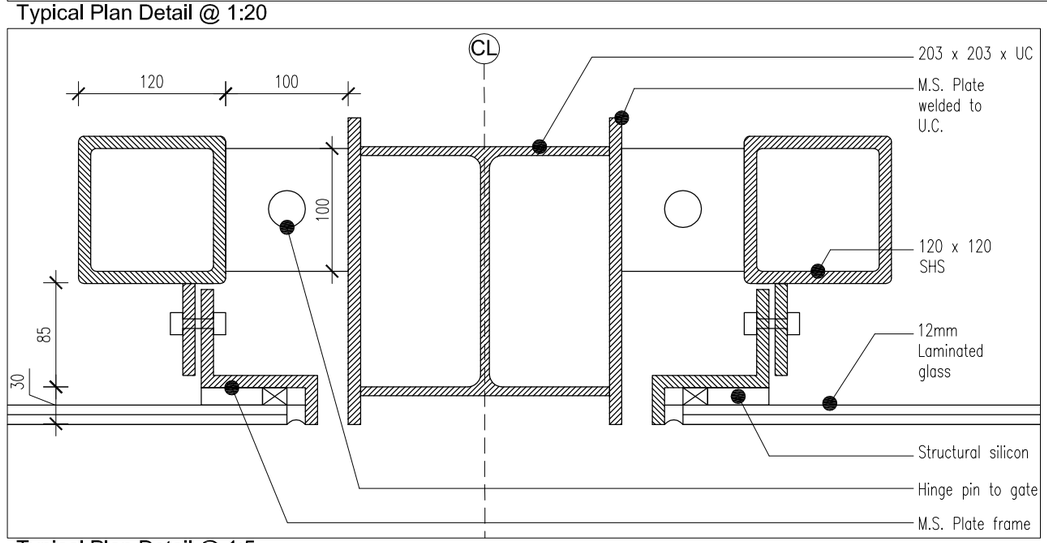

Typical Plan Detail @ 1:5

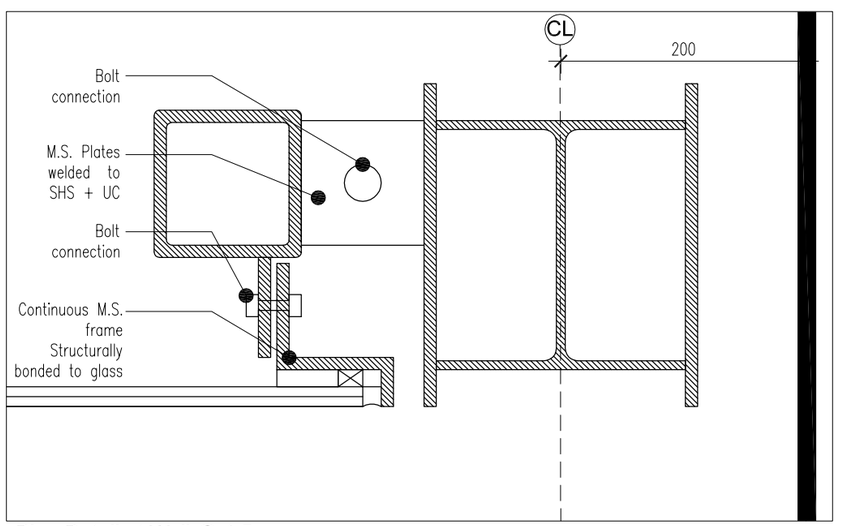

Plan Detail at Wall @ 1:5

1. All welds to be made smooth by grinding down
2. Steelwork assemblies.
   i.e. posts, frames to gate, panels and carrier framework to glazing. All to be galvanised.
3. Laminated glass to be silicon bonded to M.S. frame off site.
4. Galvanised steelwork to be solvent washed as recommended to receive decorative paint finish.

FOR PLANNING

walker simpson architects
33 Piccadilly Manchester M1 1LQ
Tel 0161 228 7406 Fax 0161 228 7046

PROJECT: MOSI Entrance Gates
TITLE: GATE DETAILS
SCALE: 1:20@A3 DATE: 130812
DRAWN: AG NUMBER: WSA.0302.P.25