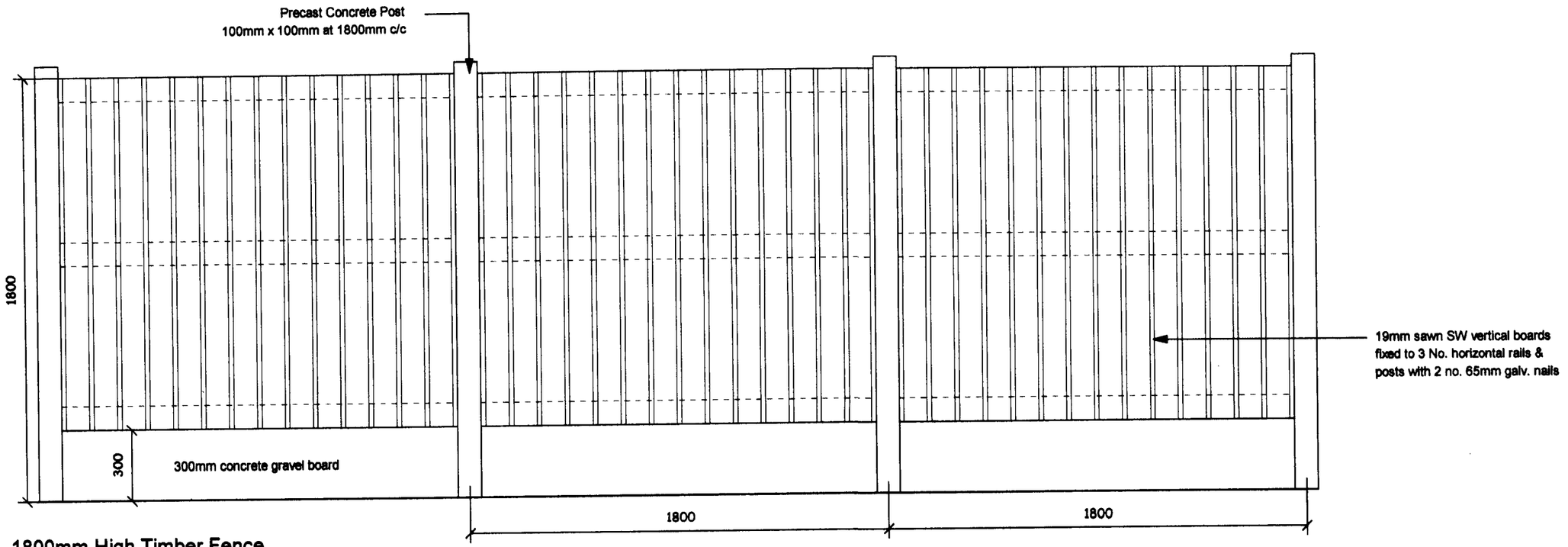

1800mm High Timber Fence

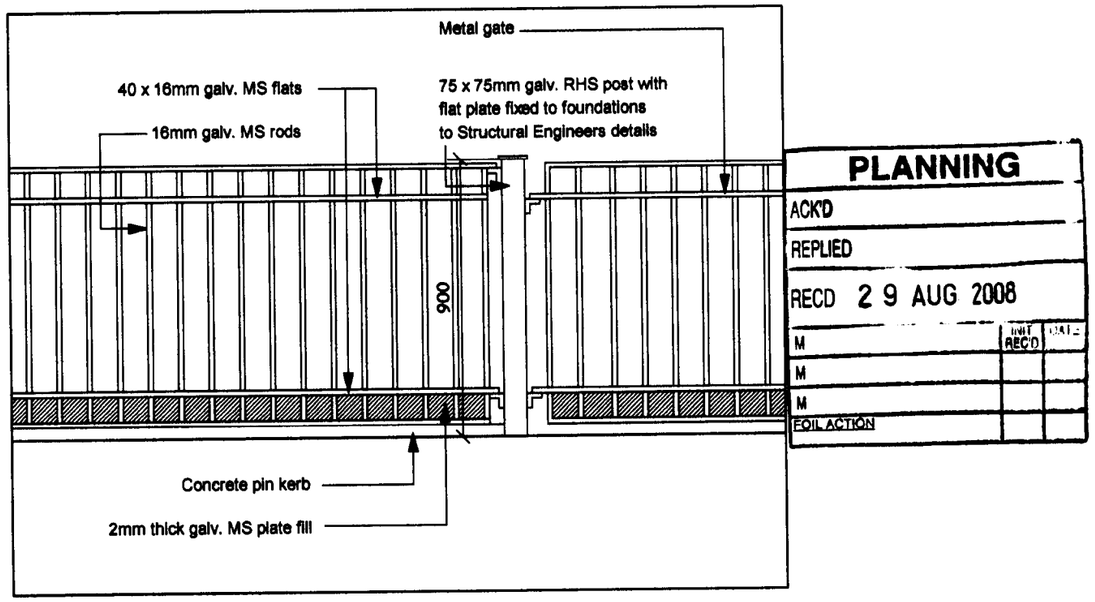

PLANNING
ACK'D
REPLIED
RECD 29 AUG 2008
M
M
M
FOIL ACTION
INIT RECD
DATE

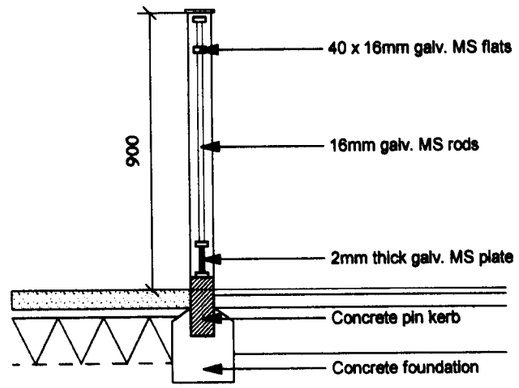

900mm High railings and gates

Client	Description			Job N	1846(E)
WILLOW PARK HOUSING TRUST	BOUNDARY DETAILS			Drg N	05
Job	Drawn	Date	Scale	Rev.	
WOODEND ROAD, WYTHENSHAWE	CD	15/01/08	1:20		

Bernard Taylor Partnership Ltd.
Architects
ELIZABETH HOUSE, 486 DIDSBURY ROAD, HEATON MERSEY,
STOCKPORT, CHESHIRE, SK4 3BS.
Tel: 0161-443 1221
Fax: 0161-442 1672
E-mail: Info@BernardTaylor.co.uk