JCDecaux

PLAN AT ABOVE PANEL

SCALE 1:100



SECTION A-A

SCALE 1:100

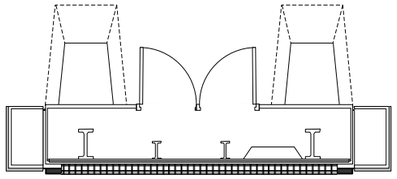

PLAN AT BASE OF PANEL

SCALE 1:100

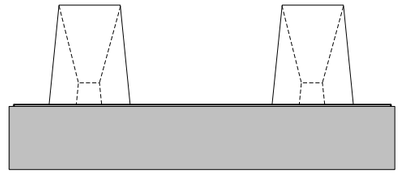

FRONT ELEVATION

SCALE 1:100

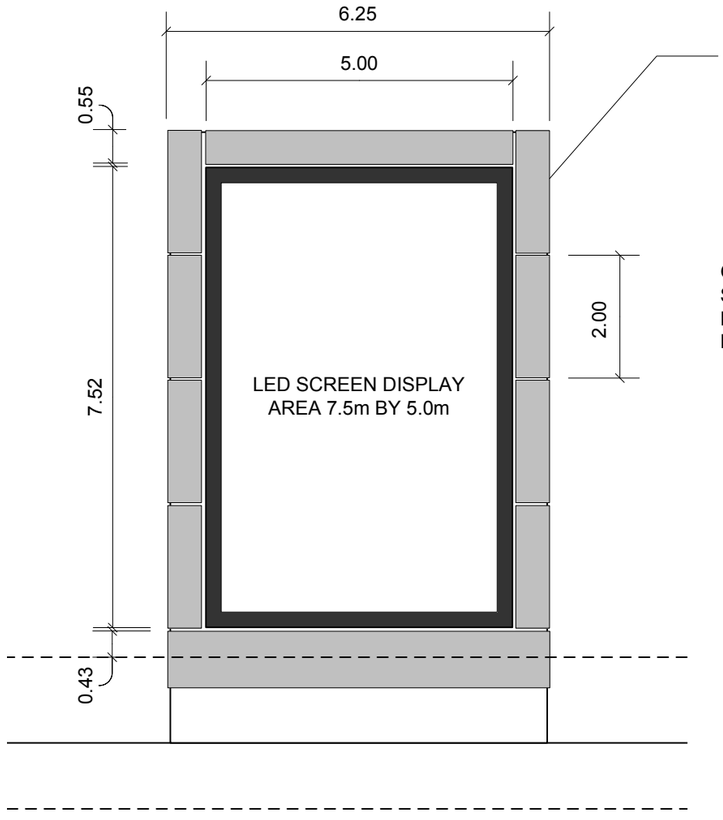

SIDE ELEVATION

SCALE 1:100

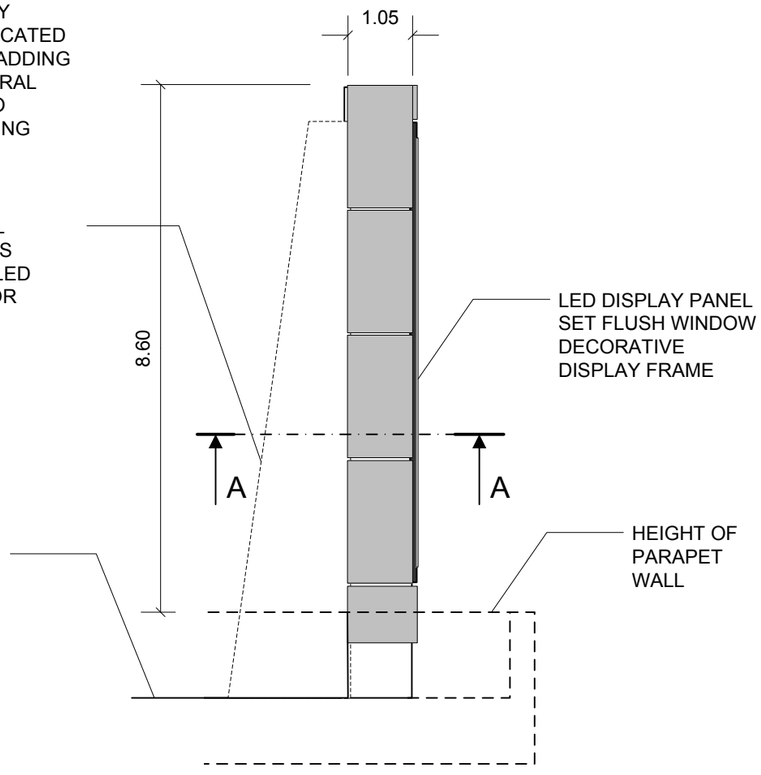

Notes

Unit Surround

The display unit will be housed within a purpose built and designed outer shell made of alluminium cladding and coated to give the impression of concrete and to match the look of the remainder of the building. The structure will be secured to the surface car park area in accordance with engineering specification.

LED UNIT

The display panel will comprise an LED unit supplied by AOTO Electronics utilising 10mm pixel pitch on a series of 1600mm x 800mm LED cabinets in accordance with manufacturers details. Each module will be low energy unit with an effective life of 100,000 hours and weight of 70kg per cabinet. The cabinets will be capable of displaying a range of high resolution images changed remotely via an ISDN line and can include instantaneous news and emergency messages.

0 1.5 2.5 5

JOB TITLE	City Tower Piccadilly Plaza Manchester M1 4BT	
CLIENT	Bruntwood Estates	
SCALE	1:100 @ A3	
DRAWING	Panel Specification and Detail	
REFERENCE	**A00779/04**	REV

991 Great West Road
Brentford
Middlesex
TW8 9DN

T: +44 (0) 208 326 7732
F: +44 (0) 208 326 7738
W: www.jcdecaux.co.uk

copyright of JCDecaux ©