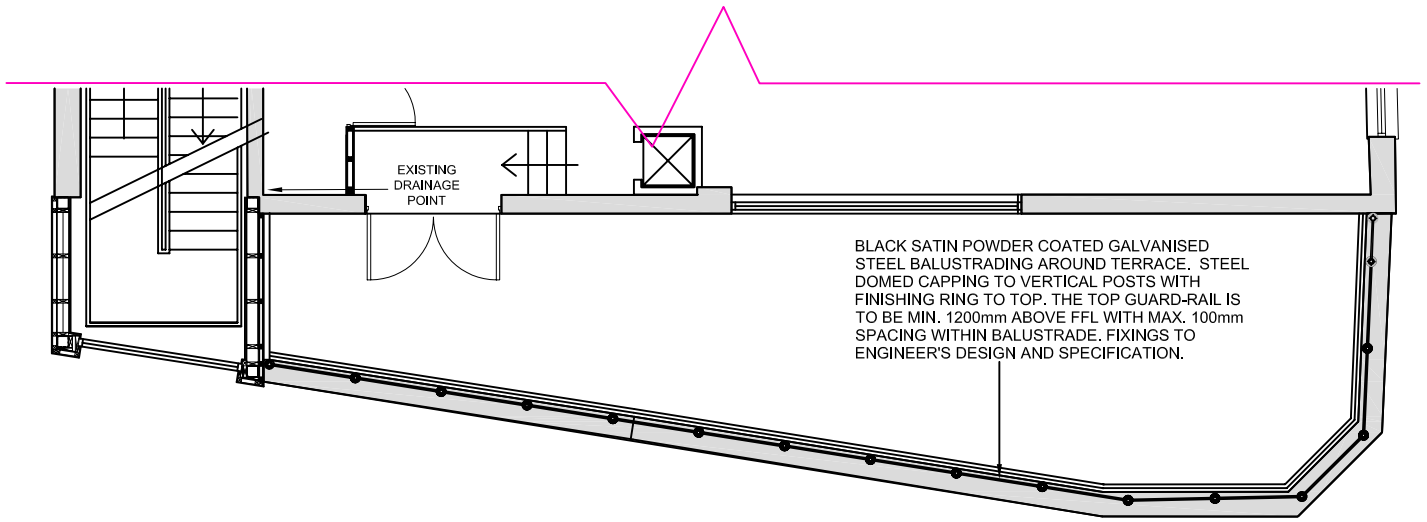

FLAT ROOF LAYOUT
SCALE 1:100

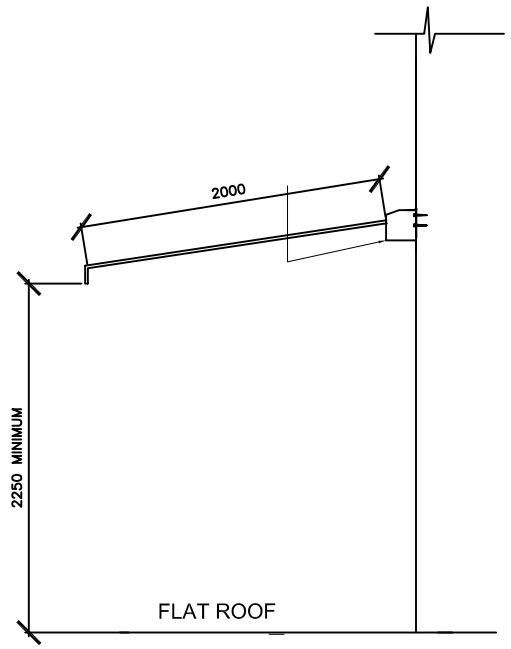

MANUALLY OPERATED RETRACTABLE FABRIC AWNING. FABRIC COSTA RED WITH COSTA LOGO IN CENTRE WALL MOUNTED TYPE "WANDMONTAGE EURO-PRASIDENT" CONTACT DEANS BLINDS 0208 9478931FOR FURTHER DETAILS.AWNING BOX AND FRONT METAL EDGE TO BE FINISHED COSTA RED TO MATCH PANTONE 202

AWNING DETAIL
SCALE 1:50

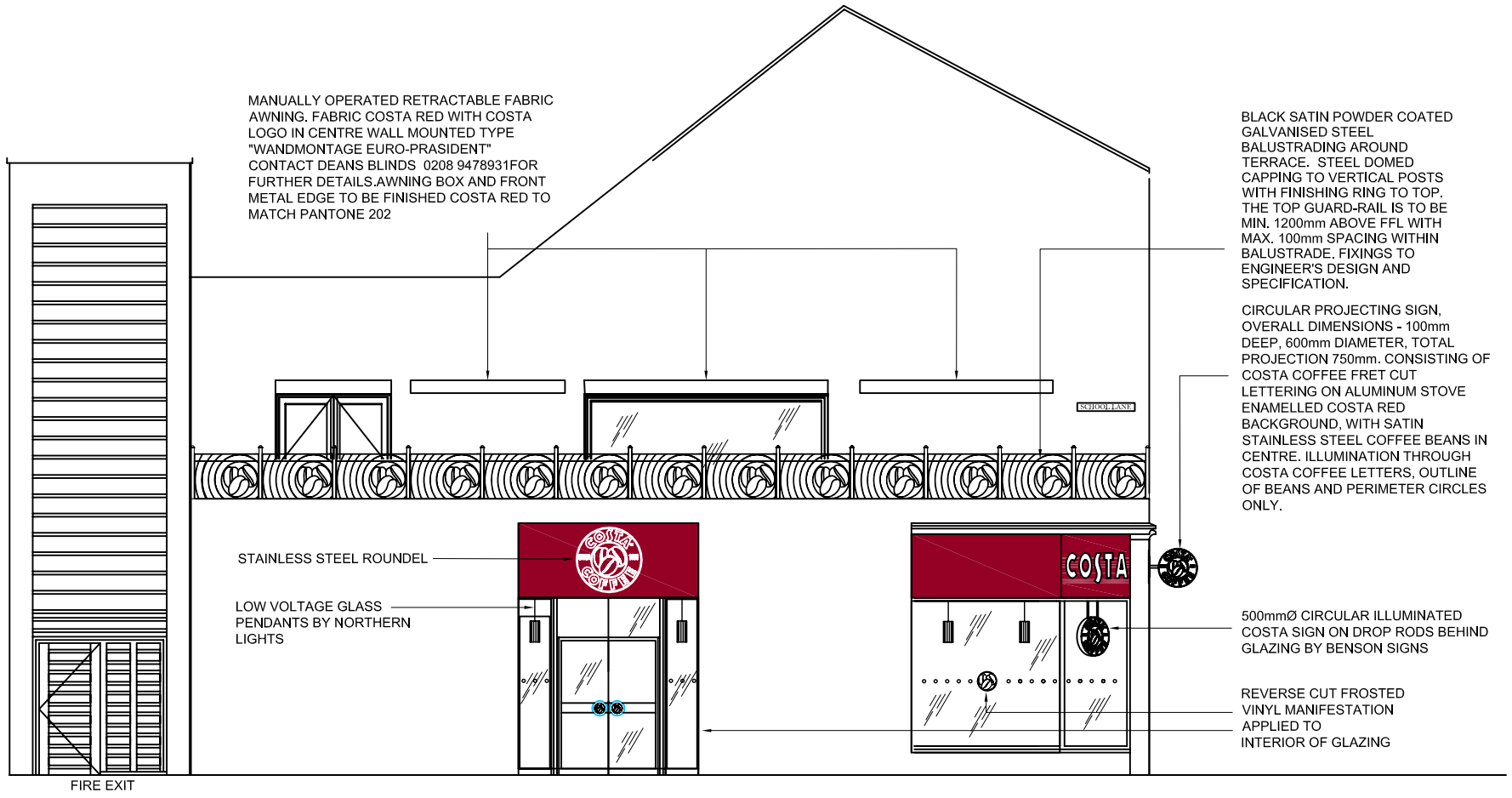

SCHOOL LANE EXTERNAL ELEVATION
SCALE 1:100

EXAMPLE OF COSTA AWNING

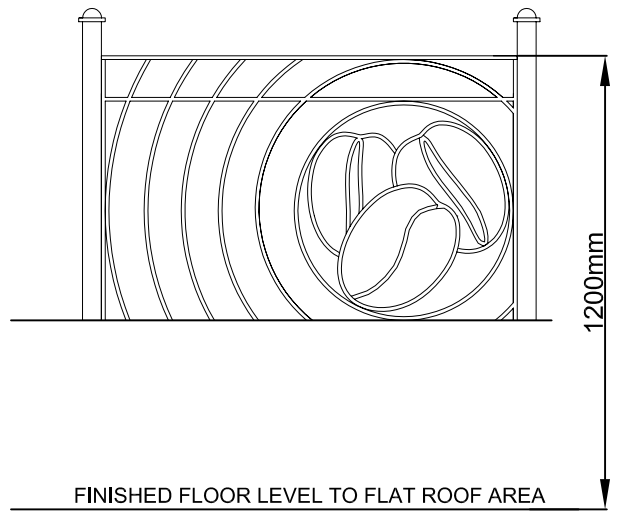

FLAT ROOF BALUSTRADE ELEVATION
SCALE 1:20

LEGEND

REF	DESCRIPTION
A.	FULL PACK ISSUE (07-05-08) CE

This drawing is not to be scaled only figured dimensions are to be followed. Contractors to check all dimensions and conditions on site and refer any discrepancy to S.G.M. MANAGEMENT AND DESIGN LTD.
This drawing is the sole property of S.G.M. MANAGEMENT AND DESIGN LTD., and may not be copied or reproduced in any manner whatsoever without the owners written consent. © COPYRIGHT.

PROJECT
683 WILMSLOW ROAD
DIDSBURY
MANCHESTER M20 6RE

CLIENT
COSTA

DRAWING TITLE
School Lane
External Elevation

DESIGN / DRAWN	PROJECT MANGER	SCALE	DATE
CE	DH	As Shown	FEB 08

CONT:REF:DWG:	DRAWING No.	REV:
11721	4.4	A

SGM MANAGEMENT AND DESIGN LTD
104 HIGH STREET, THAME,
OXON, OX9 3DZ.
TEL: 01844 218333 FAX: 01844 218444
Email: admin@s-g-m.co.uk
website: www.s-g-m.co.uk