

ID1 Disabled w.c.
door leaf 980 x 2040

ID2 Hygiene room
door leaf 926 x 2040

ID3 Childrens w.c.
door leaf 926 x 2040

ID4 Day care
door leaf 926 x 2040

ID5 Existing door
(to be removed)
door leaf 820 x 2040

ID6 Existing kitchen door (to remain)
door leaf 820 x 2040

ID7 Existing door (sealed off)
door leaf 820 x 2040

ID8 Day Care
door leaf 900 x 2040

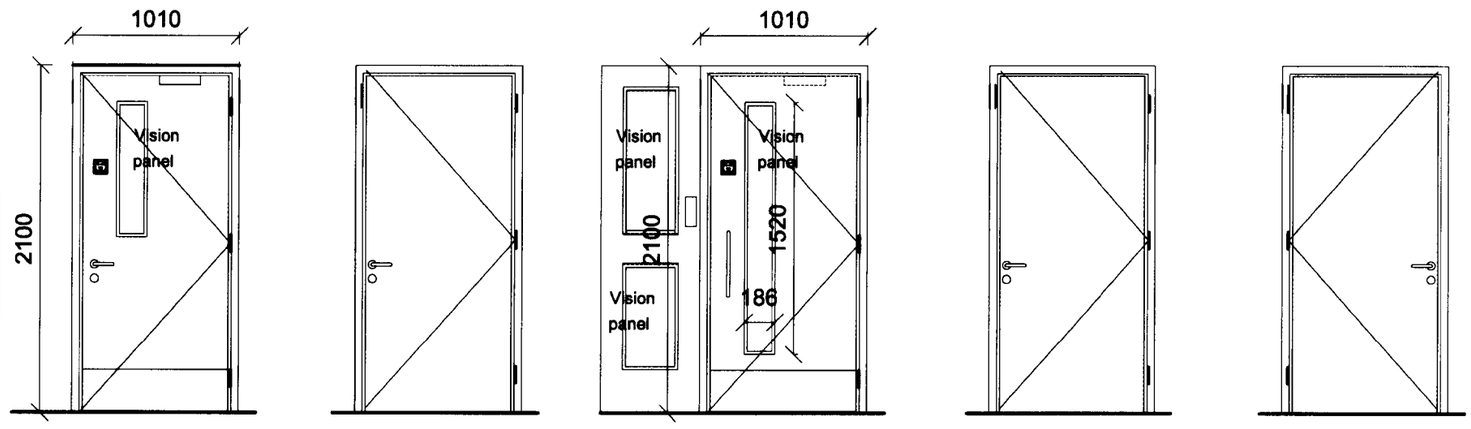

ID9 Multi-Agency
door leaf 900 x 2040

ID10 Existing door
(cleaners)
door leaf 820 x 2040

ID11 corridor door & screen
door leaf 926 x 2040

ID12 Existing door
door leaf 900 x 2040

ID13 Existing door
door leaf 900 x 2040

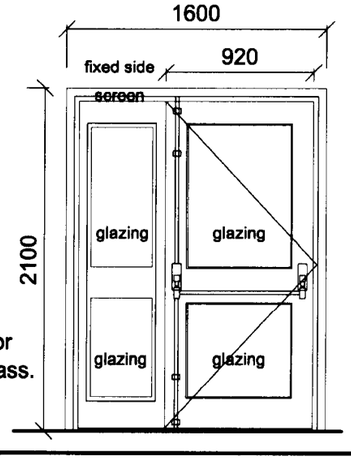

ED1- (internal view)
Hardwood external door with toughened safety glass.
920 x 2040 door leaf with fixed side screen

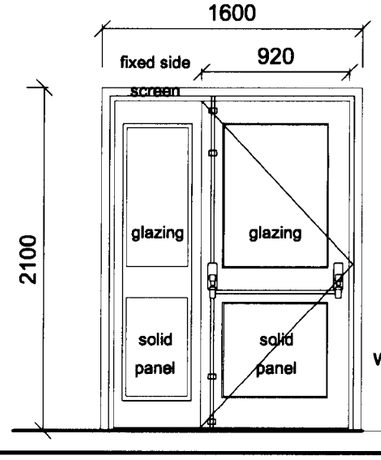

ED2- (internal view)
Hardwood external door with toughened safety glass.
920 x 2040 door leaf with fixed side screen

SEE ALSO DRAWING 06 FOR DOOR SPECIFICATION DETAILS

Doors ID6, ID12, and ID13 are exisitng doors to be re-used. (type FD 30).
To be cleaned, sanded and painted, 1 undercoat and 1 coat gloss to match new doors.

New Doors ID1, ID2, ID3, ID4, ID8, ID9, and ID11 to be 44mm thick solid core with laminate finish, with intumescent strips, all to be FD 30 type.
ID1,ID2,ID3, ID4, ID8, ID9 doors to have s/s lever handles to both sides (Laidlaw 'Centurion' satin stainless steel) and Euro profile 5 lever mortice sash lock with cylinder & escutcheon, 1.5 pair 100mm butt hinges, Briton door closers (2003 Se) and 225mm high x full width s/s kickplates to both sides. ID11 to have 400mm s/s pull handle with blanking plate to other side, Briton 2003 Se closer.

ID11 to have 400mm long s/s pull handles with blanking plate to other side, Briton self closer (2003 Se) , 1.5 pair butt hinges and 225mm high x full width s/s kickplate to both sides.
Mechanical keypad lock to be provided with keypad access from main entrance side and escape release turn on accommodation side.
Vision panels to be Pilkingtons Pyroshield . double glazed to FD 30 rating with hardwood beading.

All new doors to be painted with 1 coat undercoat and 1 top coat satin .

Provide finger guards to all above internal doors, 'Kindagard' or similar approved.

Provide and fix 10 No. floor mounted door stops

Provide and fix 10 No. 'Fire door keep shut' signs.

PLANNING
REC 11 NOV 2009

Rev	Description	Date	by	chkd
A	Various spec changes to doors.	19.10.09	MW	

Corporate Technical Services Group
Heron House
Manchester
M2 5LE

Westwood Child Guidance Building
Westwood St, Moss Side, M14 4PH
JOB TITLE: Sure Start Temporary Accommodation
DRAWING TITLE: Door Details

COMPUTER FILE	DATE	SCALE	DRAWN	CHECKED
	22.09.09	n.t.s.	Mike Williamson	

JOB NO.	DRAWING NO.	REVISION
EY/ 37025	08	A