PLANNING AND BUILDING CONTROL
30 APR 2012
HN

Roof hood

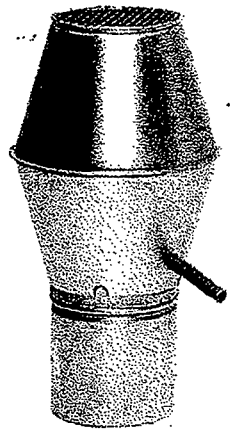

Dimensions

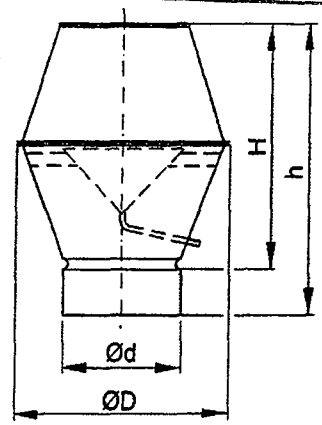

Ød nom	ØD mm	H mm	h mm	m kg	Roof through connection TGR 50 mm Size	Roof through connection TGR 100 mm Size
80	130	160	310	0,66	3	3
100	180	220	360	0,96	3	3
125	225	240	380	1,26	3	4
160	280	340	475	1,95	3	4
200	345	420	555	2,92	3	4
250	430	505	640	4,31	4	5
315	550	620	755	6,75	5	6

Description

Ventilation hood for air exit above roof, suitable for both industrial and comfort ventilation. The air is ejected in an upwards-directed jet. This avoids contaminating the air in the vicinity of the hood, and soiling of the area around the hood. The ejection is so effective that you can install a fresh air inlet in the immediate vicinity of the hood, without any special precautions.

The hood is made of galvanised sheet steel, and can also be supplied in other materials such as stainless steel, aluzinc and painted in various colours, to special order. It has a net over the opening and an internal rain funnel to collect rainwater and snow, which is drained out of the hood through a hose. The hose can withstand temperatures of between -45 and +65 °C.

The hood has a female connection, which fits outside a ventilation duct. The hood can be ordered with other connections, however.

The hood can be supplied with four anchorage eye-bolts to special order.

As special delivery the hood can be supplied with three fastening wire-loops.

Ordering example

	HN	315
Product		
Dimension Ød		

Technical data

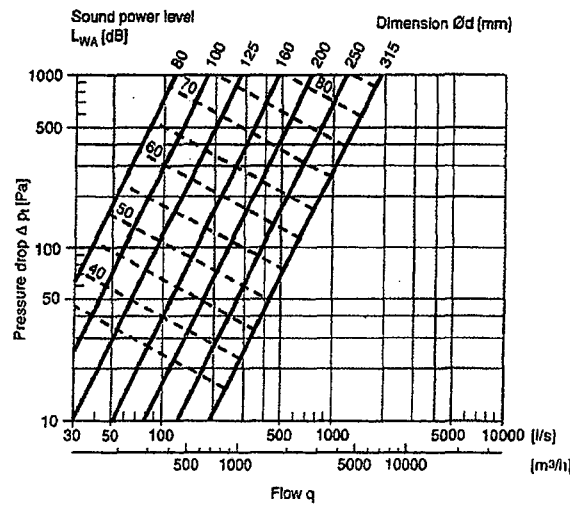

We reserve the right to make changes without prior notice

Lindab