ALL ELEVATIONS VIEWED FROM OUTSIDE.

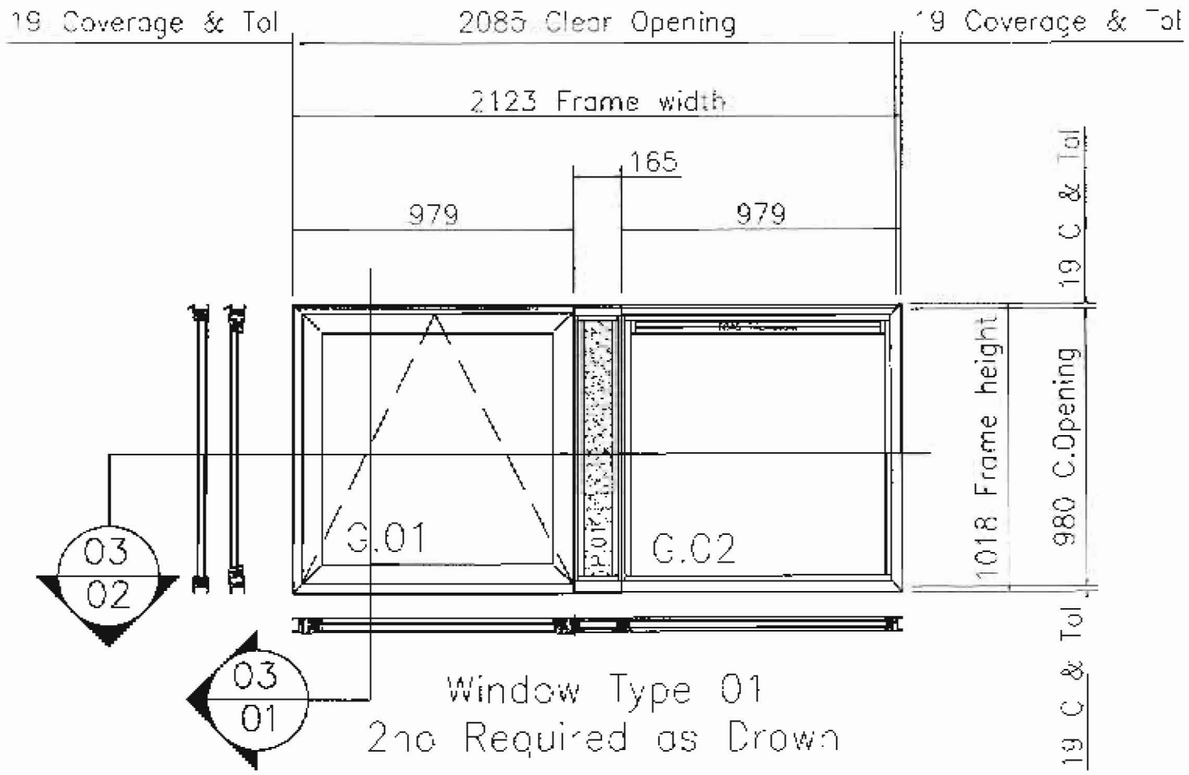

Window Type 01
2no Required as Drawn

WINDOW SPECIFICATION:

Windows Constructed from Seniors SPW 300 series Polyamide thermally broken system (PA66 GF25). Sections extruded from Aluminium alloy 6063.T6 to BS EN 755 part9: 2001.

WINDOWS FITTED WITH:

- Concealed Friction Hinges.
- Locking Cockspur handles Colour finish: Silver/grey
- Non-releasable restrictors set to 100mm Max to GF only.
- Renson TC45 Glaze-in ventilator

FINISH:

P.P.C BS 4800 18 B 25

All P.P.C to be 40 microns min

SILICONE POINTING:

Colour: Anthracite (External)

GLAZING SPECIFICATION:-

28mm double-glazed units comprising of:
- 4mm clear toughened outer
- 20mm argon filled silver cavity
- 4mm clear toughened planibel-G low 'e' inner

28mm composite panel comprising of:
- 2mm Aluminium P.P.C outer
- 24mm insulated board
- 2mm Aluminium P.P.C inner

To achieve a overall glazing Package 'u' value of: 2.2W/M²K

Section.	framing Reference.
Outer frame.	SPW31214
Vent frame.	SPW31716 (Espag)
Muntin/mu lon.	SPW31913 (S/port)
Vent Bead.	SW464 (Square)
Outer Bead.	SPW328 (Square)
Drip.	SXTW216

Windows are to be fixed 200mm from each end and @ 500mm fixing centres MAXI

Qty.	Glass Reference.	Glass Size.
4no.	G.01 (Vent)	831mm x 844mm
4no.	G.02 (Fixed Light)	915mm x 862mm
4no.	P.01 (non-vision)	128mm x 928mm

Qty.	Glass Reference.	Tricklevent size (O.A Width).
4no.	G.02 (Fixed Light)	915mm

E	1. Drawings re-issued as CONSTRUCTION
A	1. Trickle vent extra over accepted & added to spec. 2. Drawings re-issued for final comments/approval
	REVISION DESCRIPTION
	DO NOT SCALE - IF IN DOUBT ASK

NG DEVELOPMENTS (Normanton) LTD
specialists in architectural aluminium systems

PLANNING
ACK'D
REPLIED
REC'D 31 JUL 2008
M
M
M
FOR ACTION

JOB TITLE: Varley Street
CLIENT: Introbuild
DRAWING TITLE: Glazing Schedule
SCALE: 1:10@A1 | DRAWN BY: P.J | DATE: May.08
DRAWING No. C1098-01 | REV. B
STATUS: CONSTRUCTION

This drawing is the property of NG Developments Ltd. It is a confidential document and must not be copied, used or its contents divulged without prior written consent.

DRAWING STATUS
- A. PROCEED WITH MANUFACTURE
- B. PROCEED SUBJECT TO COMMENTS
- C. REVISE AND RE-SUBMIT

SIGNED..... DATE.....

ALL ELEVATIONS VIEWED FROM OUTSIDE.

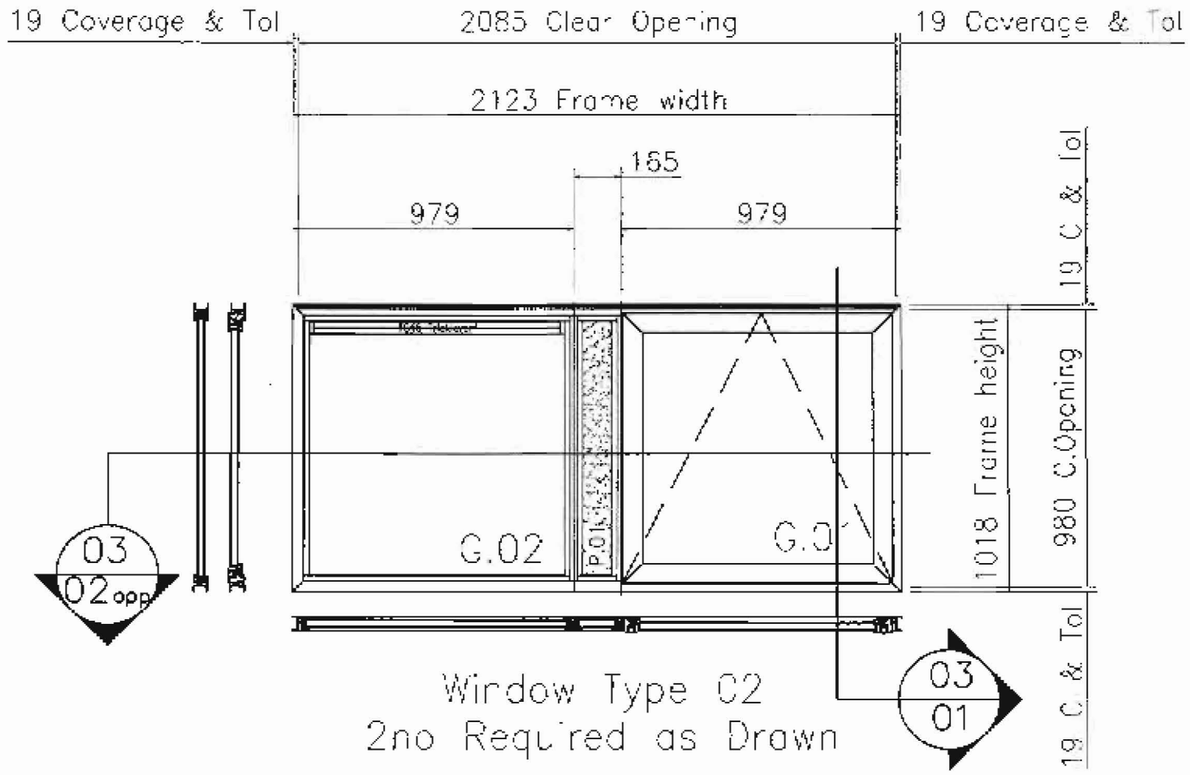

Window Type C2
2no Required as Drawn

WINDOW SPECIFICATION:

Windows Constructed from Seniors SPW 300 series Polyamide thermally broken system (PA66 GF25). Sections extruded from Aluminium alloy 6063.T6 to BS EN 755 part9: 2001.

WINDOWS FITTED WITH:

- Concealed Friction Hinges.
- Locking Cockspur handles Colour finish: Silver/grey
- Non-releasable restrictors set to 100mm Max to CF only.
- Renson TC45 Glaze-in ventilator

FINISH:

P.P.C BS 4800 18 B 25

All P.P.C to be 40 microns min

SILICONE POINTING:

Colour: Anthracite (External)

GLAZING SPECIFICATION:-

28mm double-glazed units comprising of:
- 4mm clear toughened outer
- 20mm argon filled silver cavity
- 4mm clear toughened planibel-G low 'e' inner

28mm composite panel comprising of:
- 2mm Aluminium P.P.C outer
- 24mm insulated board
- 2mm Aluminium P.P.C inner

To achieve a overall glazing Package 'u' value of: 2.2W/M²K

Section.	framing Reference.
Outer frame.	SPW31214
Vent frame.	SPW31718 (Espag)
Muntin/mullion.	SPW31913 (S/part)
Vent Bead.	SW464 (Square)
Outer Bead.	SPW328 (Square)
Drip.	SXTW216

Windows are to be fixed 200mm from each end and @ 500mm fixing centres MAX!

Qty.	Glass Reference.	Glass Size.
4no.	G.01 (Vent)	831mm x 844mm
4no.	G.02 (Fixed Light)	915mm x 882mm
4no.	P.01 (non-vision)	128mm x 928mm

Qty.	Glass Reference.	Trickievent size (O.A. width)
4no.	G.02 (Fixed Light)	915mm

PLANNING
ACK'D
SEEN
REC'D 31 JUL 2008
INIT REC'D | DATE
M.
M.
M.
FOR ACTION

B	1. Drawings re-issued as CONSTRUCTION	
A	1. Trickle vent extra over accepted & added to spec. 2. Drawings re-issued for final comments/approval	
REVISION	DATE	REVISION DESCRIPTION
04	JOB SCALE	IF IN ELEVATION

NG DEVELOPMENTS (Normanton) LTD
specialists in architectural aluminium systems

UNIT 24
NORMANTON BUSINESS PARK
RIPLEY MAIN
NORMANTON
WAKEFIELD
WF6 1QT

JOB TITLE: Varley Street

CLIENT: Introbuild

DRAWING TITLE: Glazing Schedule

SCALE	DRAWN BY	DATE
1:10@A1	P.J	May.08

DRAWING No.	REV.
C1096-02	B

STATUS: CONSTRUCTION

This drawing is the property of NG Developments Ltd. It is a confidential document and must not be copied, used or its contents divulged without prior written consent.

DRAWING STATUS
- ☐ A. PROCEED WITH MANUFACTURE
- ☐ B. PROCEED SUBJECT TO COMMENTS
- ☐ C. REVISE AND RE-SUBMIT

SIGNED..... DATE.....