

EXISTING FRONT ELEVATION

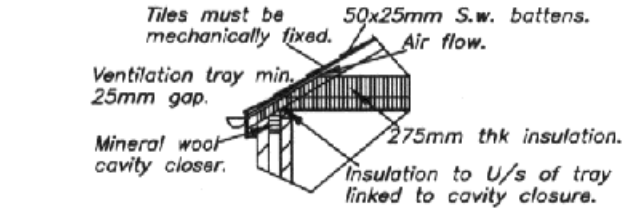

EAVES DETAIL

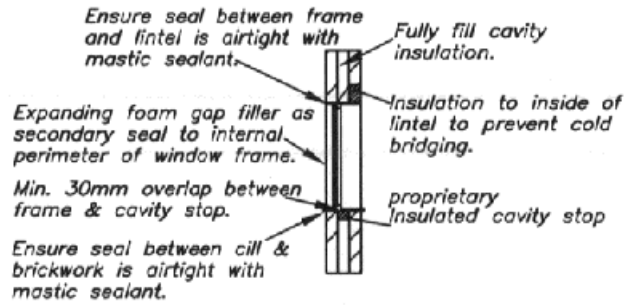

WINDOW HEAD & CILL DETAIL

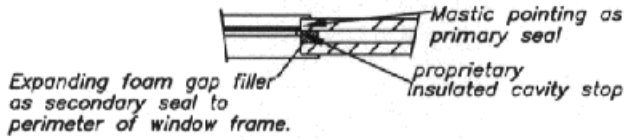

WINDOW JAMB DETAIL

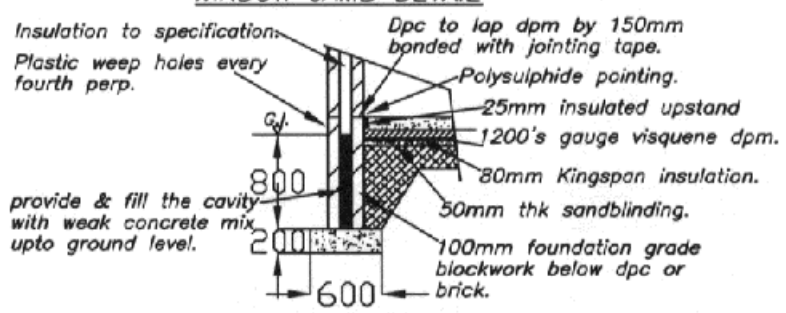

FOUNDATION DETAIL

PROPOSED LIVING ROOM EXTENSION AT SIDE OF 532,MOSTON LANE, MOSTON,MANCHESTER. M40 5RG FOR MER.&MRS POLLITT.

SCALE:-1.50 DATE:- SEPT'09

PLANNING
ACK'D
REPLIED
REC'D 10 DEC 2009
M | REC'D | DATE

NO WORK TO COMMENCE BEFORE PLANNING PERMISSION(IF REQUIRED)HAS BEEN GRANTED.
NO WORK TO COMMENCE UNTIL BUILDING REGULATIONS APPROVAL HAS BEEN GRANTED.
LES FOEY ACCEPTS NO RESPONSIBILITY FOR WORK UNDERTAKEN BEFORE BUILDING REGULATION APPROVAL OBTAINED.
ALL SIZES AND DIMENSIONS TO BE CHECKED AND VERIFIED BY THE CONTRACTOR BEFORE WORK COMMENCED AND ANY DIFFERENCE TO THIS PLAN TO BE REPORTED TO LES FOEY BEFORE WORK COMMENCES.
IF THE WORK FALLS WITHIN THE PROVISIONS OF THE PARTY WALL ACT 1996 IT IS IMPORTANT THAT THE CLIENT SERVES NOTICE TO THE OWNERS OF THE ADJOINING PROPERTY OF THE INTENTION TO BUILD TWO MONTHS BEFORE THE COMMENCEMENT DATE AND THAT WRITTEN PERMISSION IS OBTAINED.ALL PROVISIONS OF THE PARTY WALL ACT 1966 (WHERE NECESSARRY TO BE ADHERED TO.

les foey
BUILDING DESIGN CONSULTANTS
8,GLASSON WALK,
CHADDERTON,
OLDHAM,OL9 9DR
TEL&FAX: 0161-633-5057