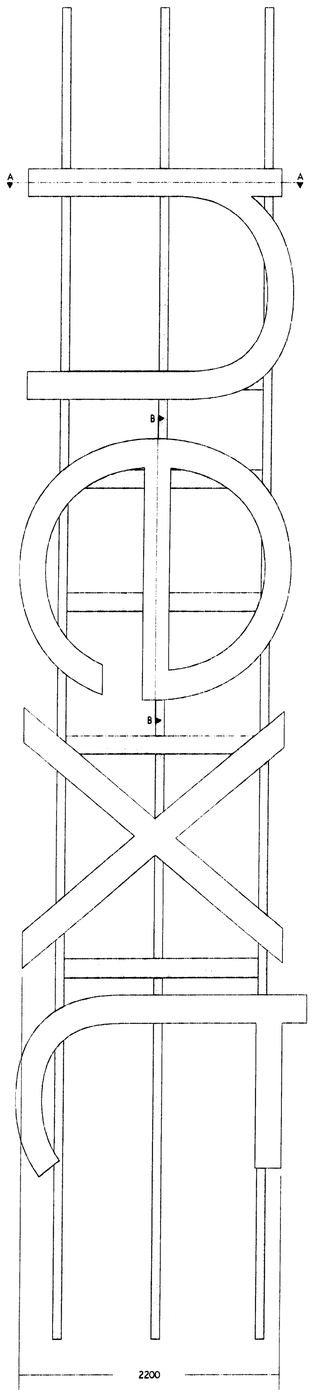

Individual Face Lit Letters

Individual letters to be fabricated aluminium face lip and returns with full backs, finished Black with Opal faces. To be internally illuminated to illuminated faces only.

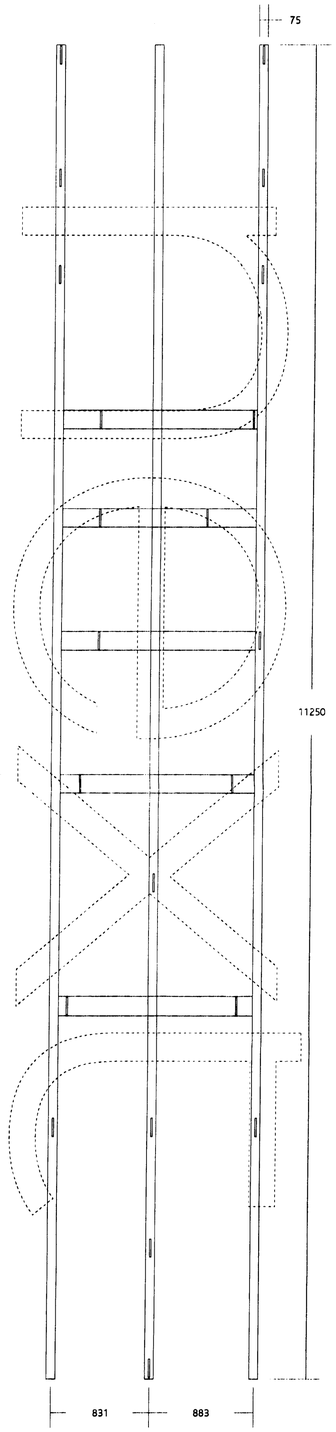

Support Frame

150 X 75 X 3 RHS support frame to hide old fixing lugs and support letters.

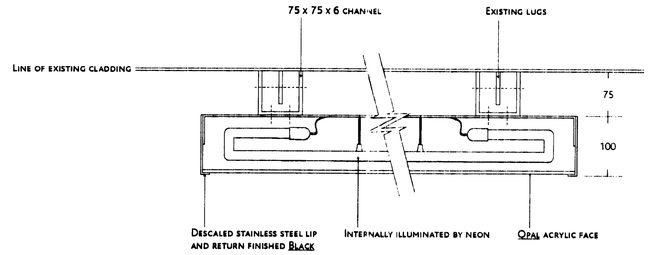

Section A-A

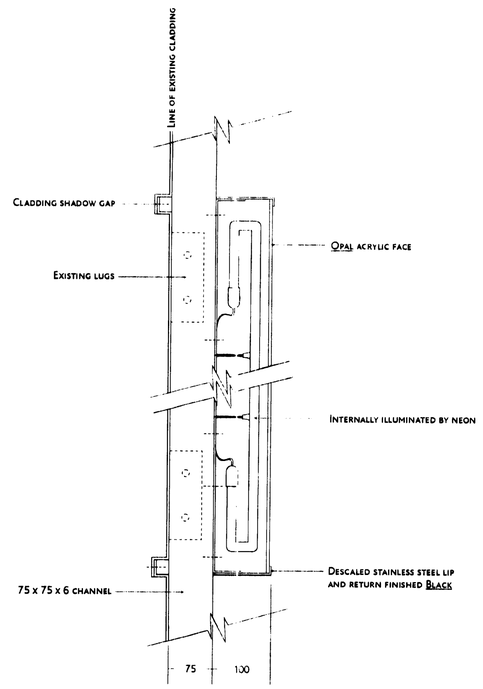

Section B-B

...NG
...D
...ED
RECD 11 JUN 2008
M
M
M
FOR ACTION

REVISIONS	A B C D E
DATE	10\06\08
SCALE	1:25,1:5
DRAWN	MC
CHECKED	DS
DESCRIPTION	High Level Individual Letters
CONTRACT NAME	Next - Manchester [Arndale SC]
DWG NO	MC\08\0625

The drawing is copyright and should not be reproduced without the consent of Signs Design Ltd. Drawings are not to be scaled unless stated. Check all dimensions on site before commencing work. Any discrepancies to be reported immediately. AUTOCAD 2002 Compatible.

Signs Design Ltd, Unit 1 Lilac Industrial Estate, Lilac Road, Bolton, Lancashire, BL1 4AG. Tel: 01204 841 000 Fax: 01204 841 001 e-mail: info@signsdesign.co.uk www.signsdesign.co.uk