Do not scale dimensions
if in doubt please ask

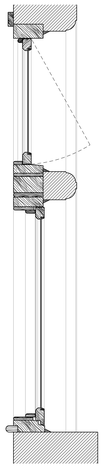

Vertical Section
Scale: 1:10

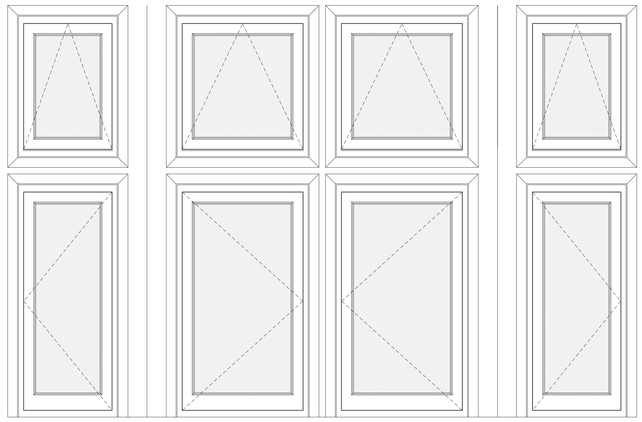

External Elevation
Scale: 1:10

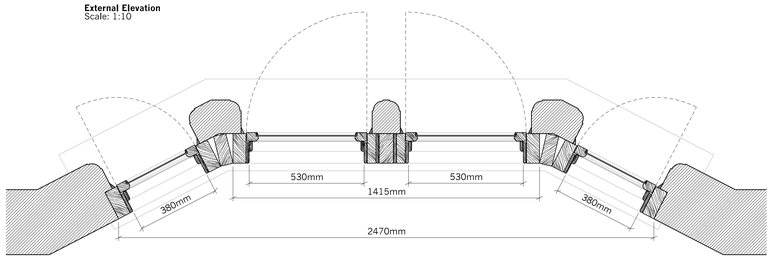

Horizontal Section
Scale: 1:10

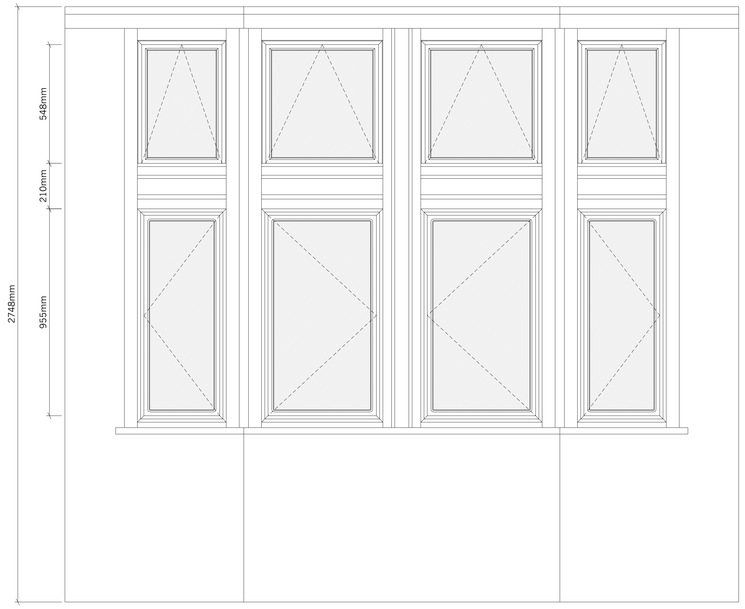

Internal Elevation
Scale: 1:10

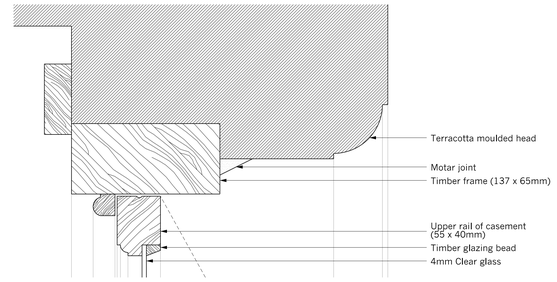

Detail D - Window Head Detail
Scale: 1:2

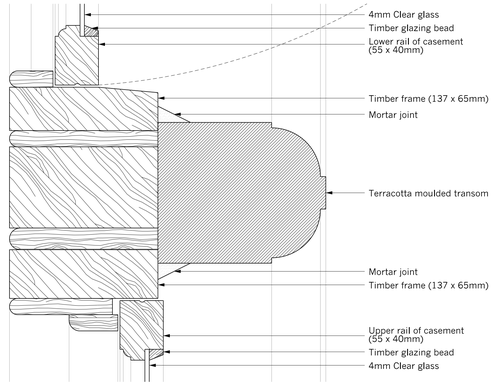

Detail E - Window Transom Detail
Scale: 1:2

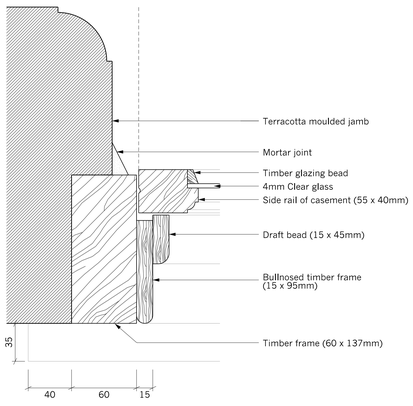

Detail A - Window Jamb Detail
Scale: 1:2

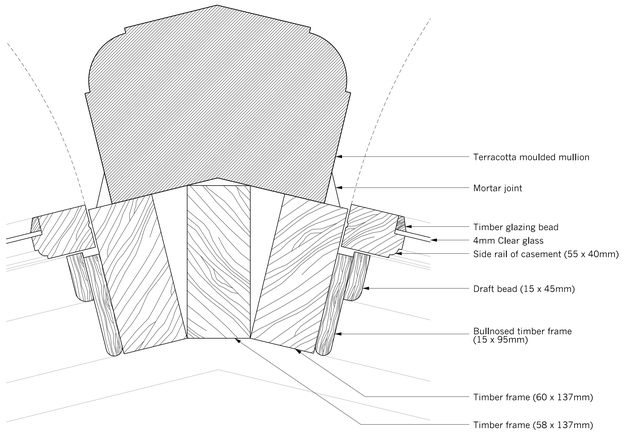

Detail B - Corner Mullion Detail
Scale: 1:2

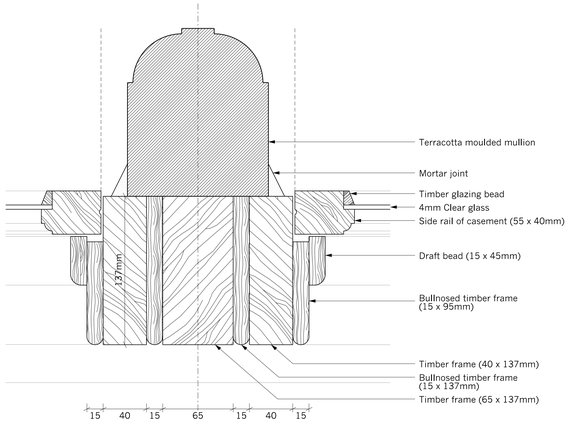

Detail C - Central Mullion Detail
Scale: 1:2

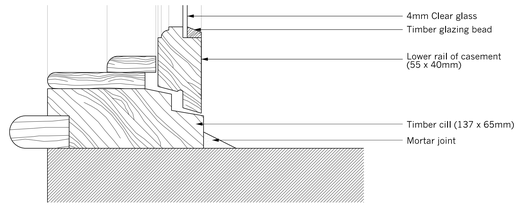

Detail F - Window Cill Detail
Scale: 1:2



Northwards Housing Association
Victoria Square, Manchester

Window Replacement Scheme
Window Type J Details - as Existing
Bay Window Oldham Road Elevation

Dwg. No: **6545 (31) 011** Rev: -
Date : 02.12.08 Scale: 1:10 @A0 Checked by : SA

buttress fuller alsop williams - architects
31-33 Princess Street, Manchester, M2 4BF telephone + 44 (0)161 236 3303
fax + 44(0)161 236 3603 • web site www.bfaw.co.uk • email:contact@bfaw.co.uk
Buttress Fuller Alsop Williams Ltd is Registered in England and Wales: 5363573