Howard Johnston
Consulting Structural Engineers
6a Northenden Road, Sale M33 3BR
Tel: 0161 962 0571 Fax: 0161 962 9994
e.mail: howardjohnston@btclick.com

CALCULATION SHEET

Job No	Sheet No 05 A
Date JAN 2013	Designer

Contract Title: ALTS / EXTS, 41 RISHWORTH DRIVE, NEW MOSTON, MANCHESTER

STEEL BEAMS OVER GROUND FLOOR

SPAN : 6.80 m.

LOADING:

(SHEET 03)

FLOOR (LOFT)	: 2.24 × 1.00/0.4	: 5.60 kN/m	12.20 kN/m.
FLAT ROOF	: 2.15 × 4.30/2	: 4.62 " "	
PITCHED ROOF	: 1.80 × 1.8/2	: 1.62 " "	
SWT		: 0.30 " "	

BMT : 12.20 × 6.8²/8 : 70.51 kNm

SHEAR : 41.50 kN

TRY 305 × 165 × 54 UB

L/ryy	: 3700/39.4	: 94	pbe : 137 N/mm²
D/T		: 22.6	

'Z' req'd : $\frac{70.51 \times 10^3}{137}$: 515 cm³
✓ ok (< 753)

'I' req'd : 2.24 × 12.20 × 6.8³ : 8592 cm⁴
✓ ok (< 11710)

Use 305 × 165 × 54 kg UB.

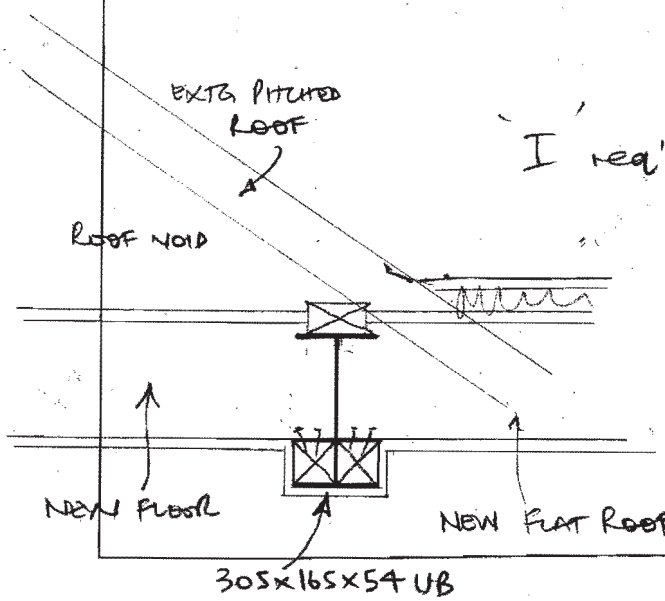

Howard Johnston
Consulting Structural Engineers
6a Northenden Road, Sale M33 3BR
Tel: 0161 962 0571 Fax: 0161 962 9994
e.mail: howardjohnston@btclick.com

CALCULATION SHEET

Job No	Sheet No 06 A
Date JAN' 2013	Designer

Contract Title: ALTS / ERTS, 41 RICHWORTH DRIVE, NEW MOSTON, MANCHESTER

Posts.

a) PARTY WALL END.

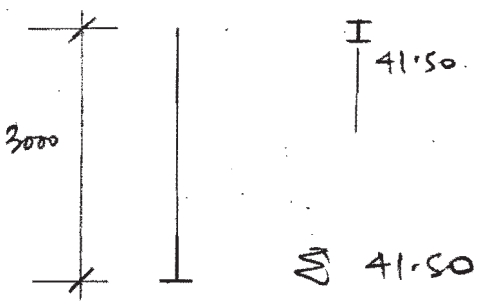

Σ 41.50 KN.

TRY 152x152x30 UC.

L/r_{yy} : $3000 \times 1.5 / 38.2$: 118 } p_{bc} : 131 N/mm²

D/T : 16.75 } p_c : 61 N/mm².

$f_{bc_{xx}}$: $\frac{41.50 \times 175}{221.2}$: 32.8 N/mm².

f_c : $\frac{41.50 \times 10}{38.2}$: 10.86 N/mm²

RATIOS

$$= \frac{10.86}{61} + \frac{32.8}{131}$$

(0.178 + 0.25)

: 0.43 ✓ M (< 1.0)

USE 152x152x30 KG UC.

Howard Johnston
Consulting Structural Engineers
6a Northenden Road, Sale M33 3BR
Tel: 0161 962 0571 Fax: 0161 962 9994
e.mail: howardjohnston@btclick.com

CALCULATION SHEET

Job No	Sheet No 07 A
Date JAN' 2013	Designer

Contract Title: ALTS / EXTS, 41 RICHWORTH DRIVE, NEW MOSTON, MANCHESTER

b) POST IN EXTERNAL WALL.

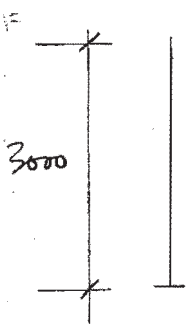

TRY 150 x 100 x 5.0 RHS

Σ 41.50 kN.

$f_c = \frac{41.50 \times 10}{23.9} = 17.40\ N/mm^2$

$f_{bc\,yy} = \frac{41.50 \times 150}{79.1} = 79\ N/mm^2$

$\lambda_{yy} = \frac{3000 \times 1.5}{40.7} = 111$ — $p_c = 68\ N/mm^2$

$p_{bc} = 180\ N/mm^2$

RATIOS

$$\frac{17.40}{68}\ (0.26) + \frac{79}{180}\ (0.44)$$

$= 0.69$ ✓ (< 1.0)

Use 150 x 100 x 5.0 RHS.

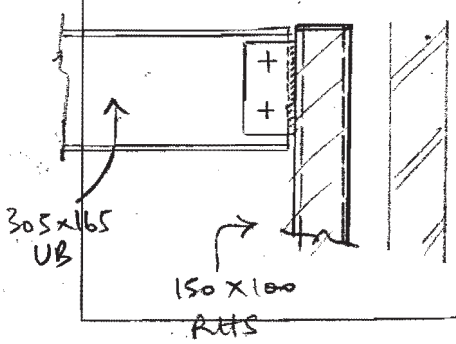

Howard Johnston
Consulting Structural Engineers
6a Northenden Road, Sale M33 3BR
Tel: 0161 962 0571 Fax: 0161 962 9994
e.mail: howardjohnston@btclick.com

CALCULATION SHEET

Job No	Sheet No 08
Date MAY '2013	Designer

Contract Title: ALTS/EXTS, 41 RISHWORTH DRIVE, NEW MOSTON, MANCHESTER

FOUNDATIONS TO POSTS.

IT IS UNDERSTOOD THE GROUND CONDITIONS TO THE REAR OF THE EXISTING PROPERTY ARE POOR, AND IT IS PROPOSED TO 'MINI-PILE' THE SINGLE STOREY REAR EXTENSION.

THE CALCULATIONS FOR THE PILES AND ASSOCIATED GROUND BEAM WILL BE SUPPLIED BY THE PILING SPECIALIST, HOWEVER, THE LOADING TO THE FOUNDATION IS ASSESSED AS FOLLOWS ;

BEAM	:	41·50 KN
POST	:	1·00 "
PILECAP (1·0x0·45²x24)	:	5·00 "
WALL (4·5x3·0x1·0)	:	13·50 "
		61·0 KN.

IT IS SUGGESTED THAT 2 NO. PILES ARE INSERTED UNDER POST LOCATION

* 100 DIA. STEEL CASED DRIVEN PILES USUALLY HAVE A CAPACITY OF APPROXIMATELY 45·0 KN./PILE

* 150 DIA. STEEL CASED DRIVEN PILES HAVE A CAPACITY OF APPROXIMATELY 100 KN/PILE.

∴ 2 NO. PILES (EITHER 100 ϕ OR 150 ϕ).