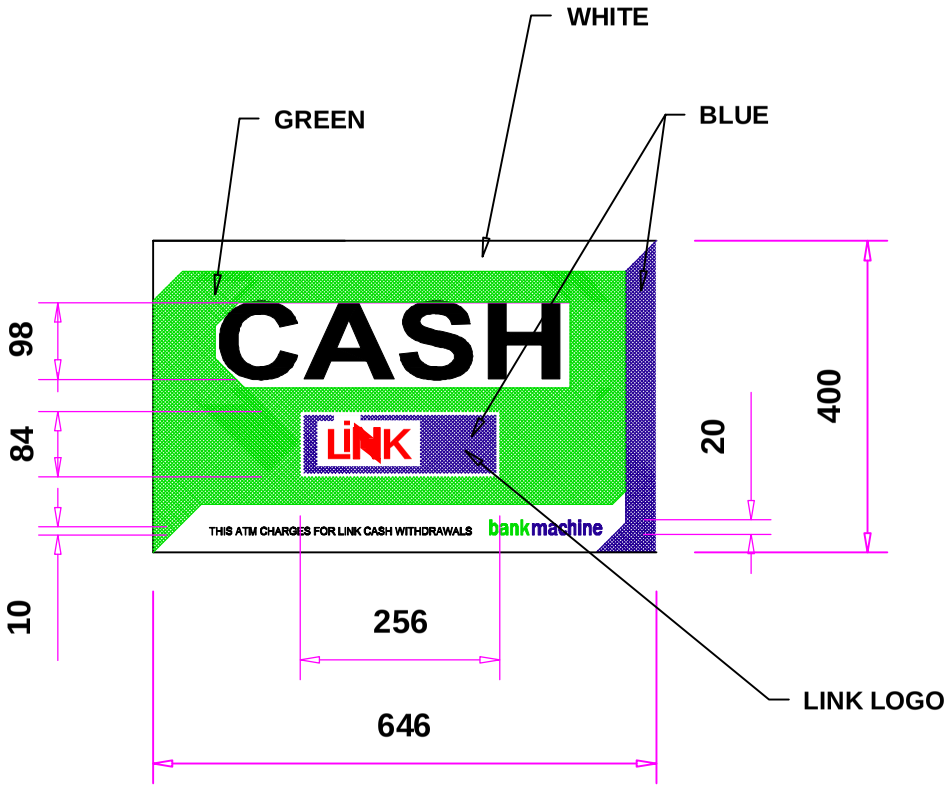

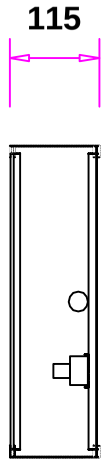

SECTI0ON A A

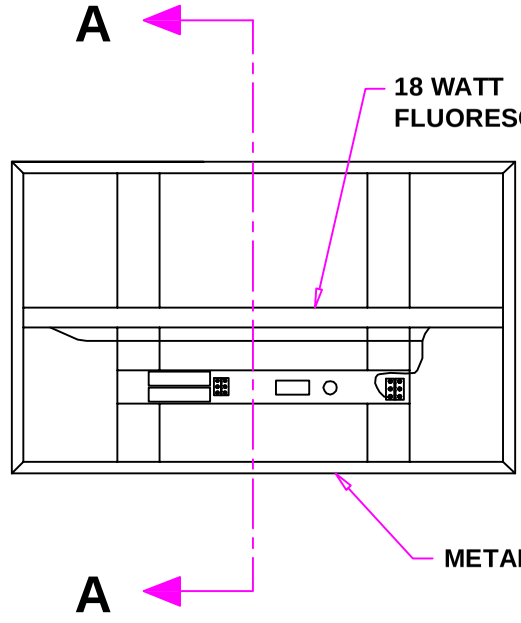

INTERNAL VIEW WITH FRONT PANEL REMOVED

BANK MACHINE ILLUMINATED SIGN	DATE 22/06/06	SCALE 1:10 AT A4 SIZE	REV	DESCRIPTION	DATE	SCALE 1:50 @ A4
Complete Technical Services Ltd. Tel:(01709821757)		DRAWN BM	01	INTERNAL VIEW ADDED	22-08-06	
C.T.S. Hope Street, Rotherham, S60 1LH	DRG No. CTS0027		02	SECTION AA ADDED	15-09-06	
			03	1:50 scale view added	08-10-08	