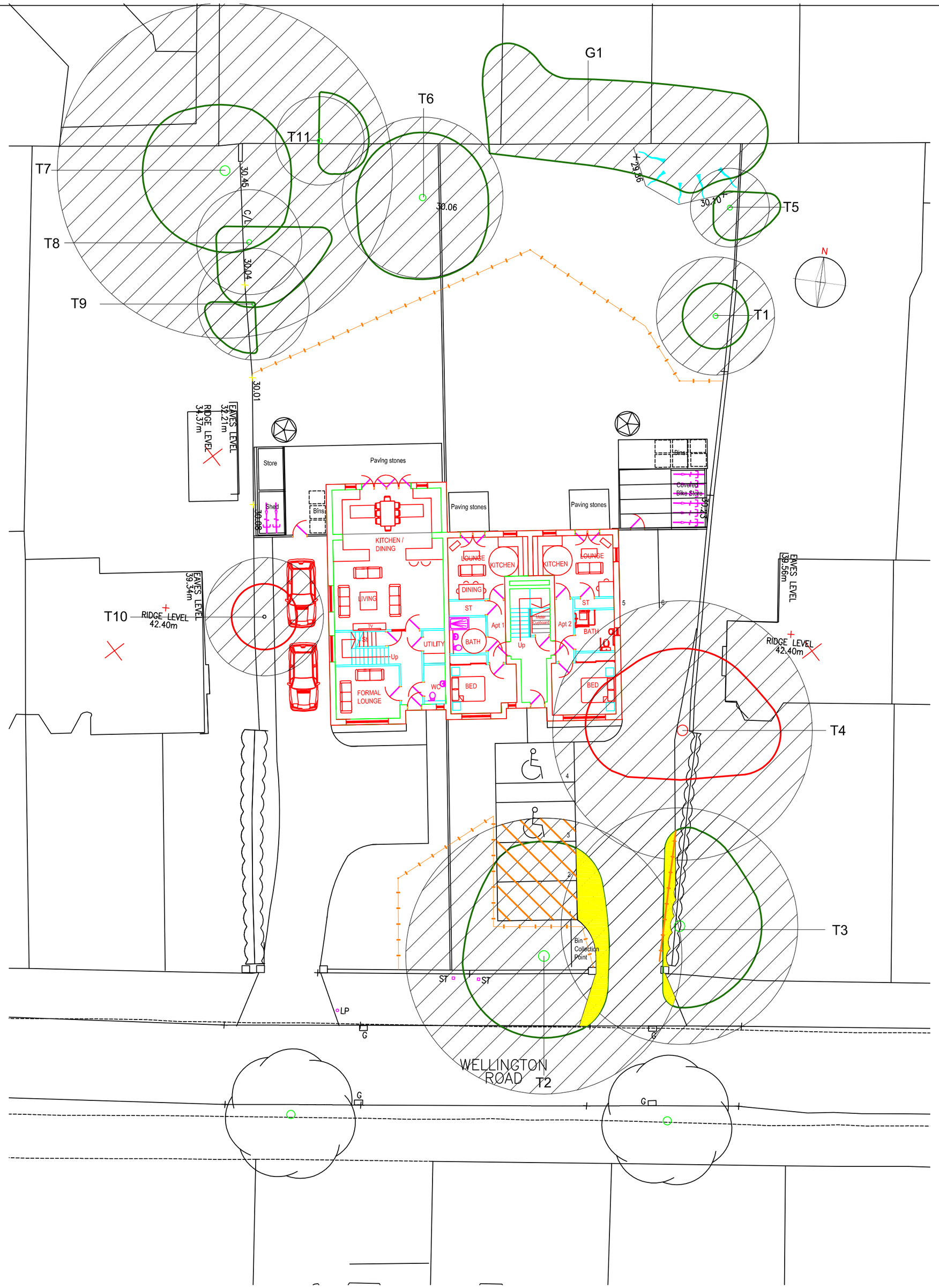

KEY

- TREE PROTECTION FENCING
- ROOT PROTECTION AREA
- REMOVE DUE TO DEVELOPMENT
- TREES TO BE RETAINED REQUIRING PRUNING
- CELLULAR CONFINEMENT SYSTEM
- BREAKING OUT OF EXISITING SURFACE LAYER

BS 5837 (2012) Tree Protection Fencing

NOTES

1. STANDARD SCAFFOLD POLES.
2. HEAVY GAUGE 2 M TALL GALVANIZED TUBE AND WELDED MESH INFILL PANELS.
3. PANELS SECURED TO UPRIGHTS AND CROSS-MEMEBERS WITH WIRE TIES.
4. GROUND LEVEL.
5. UPRIGHTS DRIVEN INTO THE GROUND UNTIL SECURE (MINIMUM DEPTH 0.6 M).
6. STANDARD SCAFFOLD CLAMPS.

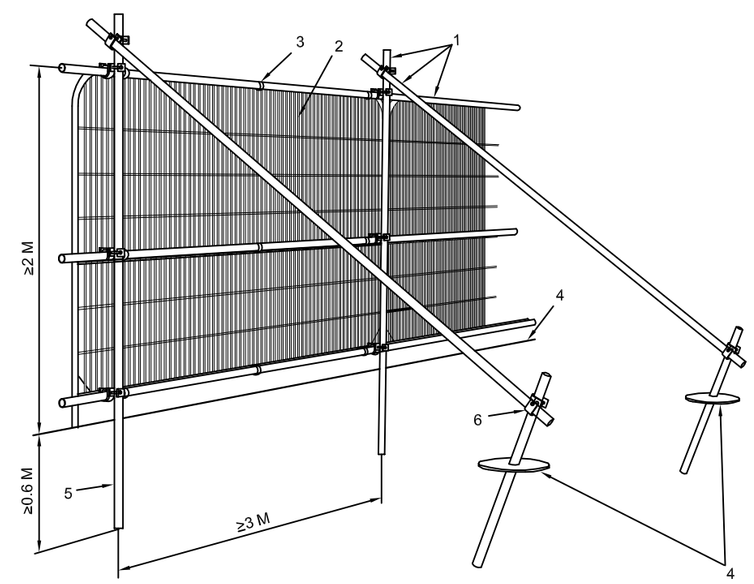

No dimension to be scaled from this drawing
© Copyright reserved

Date	Rev

tba landscape architects

Landscape Architecture
Urban Design
Environmental Planning

1st Floor, Building2
Wharf Business Centre
Lower Wharf Street
Ashton-under-Lyne
Lancs OL6 7PB

Tel: 0161-308 3765
E-mail: info@trevorbridge.co.uk

Project
28/30 WELLINGTON ROAD,
WHALLEY RANGE
HARRINGTON HOUSE ESTATES LTD

Title
TREE PROTECTION PLAN

Date	Scale(s)	Dwg no	Rev
DEC 12	1:200@A2	4285.03	

Dwn	Chkd
FW	JW