Copyright Spencer Signs Ltd. 2013

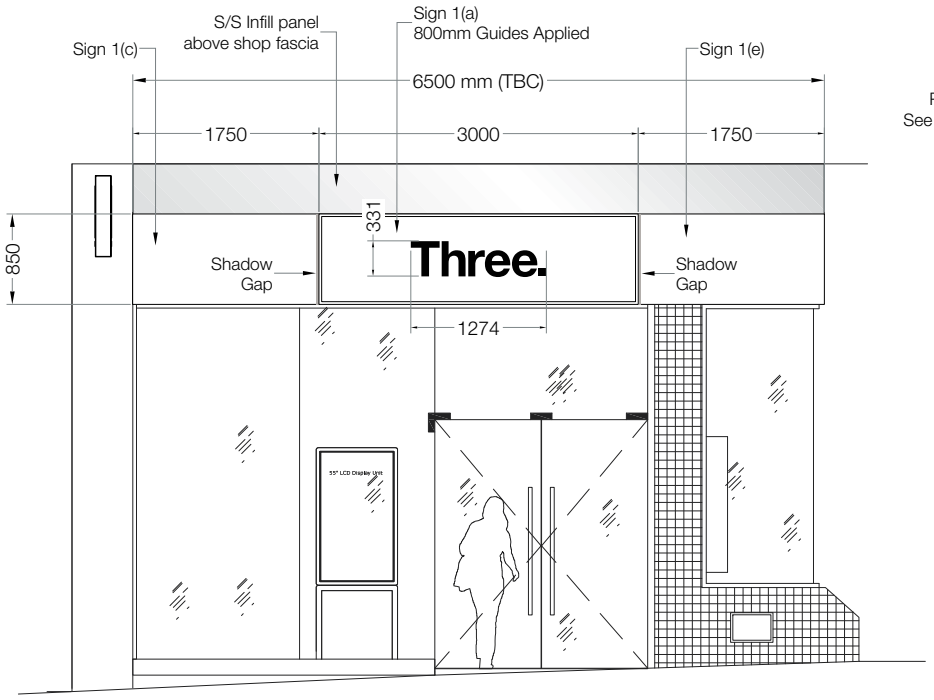

Entrance Elevation

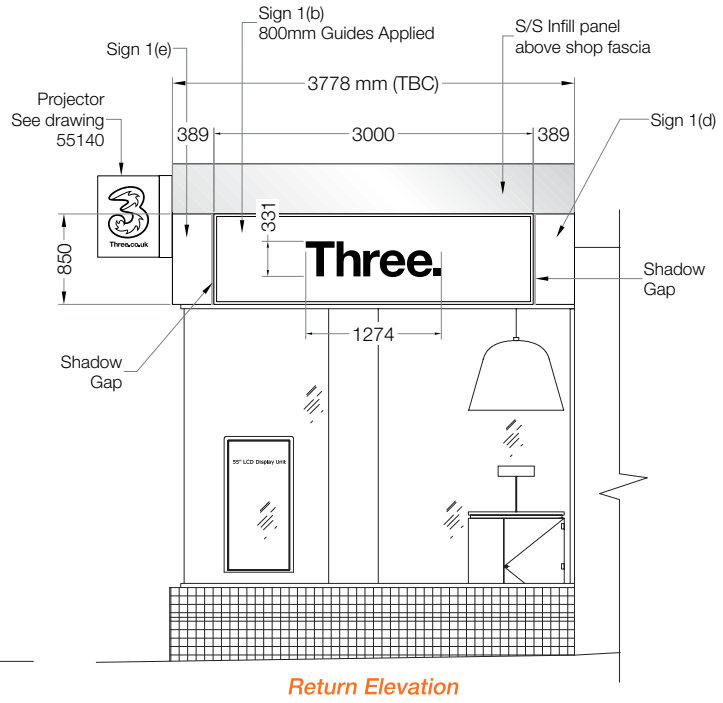

Return Elevation

Specification

Sign 1(a) & Sign 1(b)
2no of folded aluminium panels powder coated white with 100mm returns and fret cut to house 5mm opal acrylic panels with applied 19mm black acrylic letters bonded to face. Signs are internally illuminated via LED.

Sign 1(c) & Sign 1(d)
2no total of folded aluminium trays powder coated white. Returns are 100mm. Trays to include 20mm shadow gaps as indicated on drawing.

Sign 1(e)
1no total of wrap around folded aluminium trays powder coated white. Returns are 100mm. Trays to include 20mm shadow gaps as indicated on drawing.

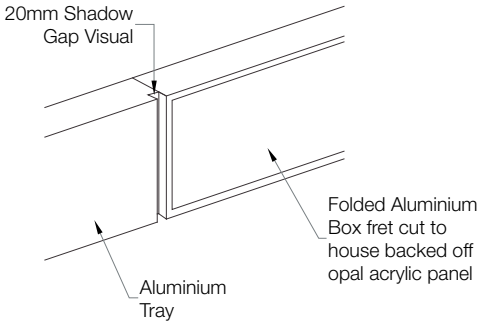



Photo Impression



Existing

SPENCER SIGNS
Unit 1, 70 Scarborough St.,
Hull, HU3 4TG
Tel. 01482 325797
www.spencersigns.co.uk
email: design@spencersigns.co.uk

Client	Three
Project	The Arndale Centre Manchester
Date	25/02/2013
DRG. NO.	56337-A
Drawn By	C Wallis
Scale	1:50 @ A3
Drawing Status	Production

Rev.	Date	Initial	Revision Detail
A	13/03/2013	CW	Fascia Guidelines applied

NOTES

ALL SIZES TO BE CONFIRMED ON INSTALLATION OF NEW SHOPFRONT

Specification checked and approved for Production By

Installation Notes
The construction shown on this drawing is standard. Please assess that the specification is suitable for the site before installing and inform the Project Manager of any issues immediately, prior to starting the installation.

Production Notes
Production Files in F Folder
Please check all artwork prior to producing and advise the drawing office of any errors prior to starting the job.

Typefaces
N/a

Colours
Black White

This Drawing & information contained may not be copied or used without prior consent from Spencer Signs. Colour shown may not accurately match any colour references. Sizes in mm unless stated otherwise.