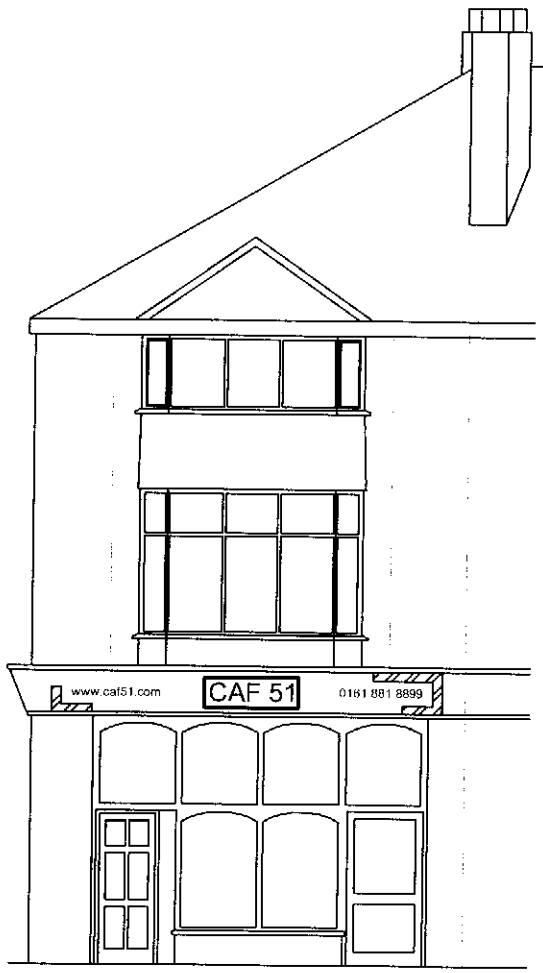

Proposed Front Elevation

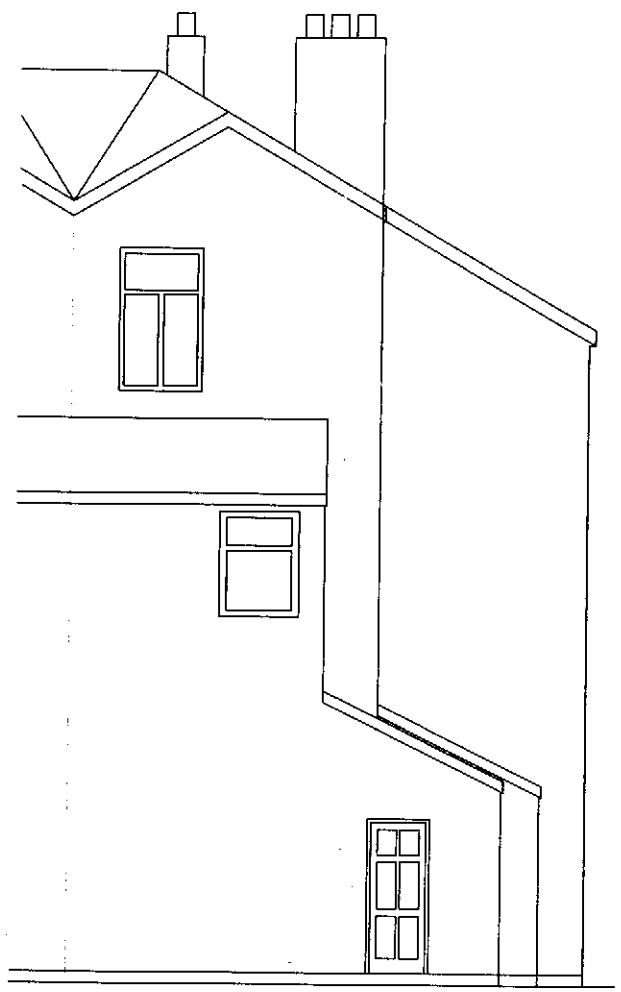

Proposed Rear Elevation

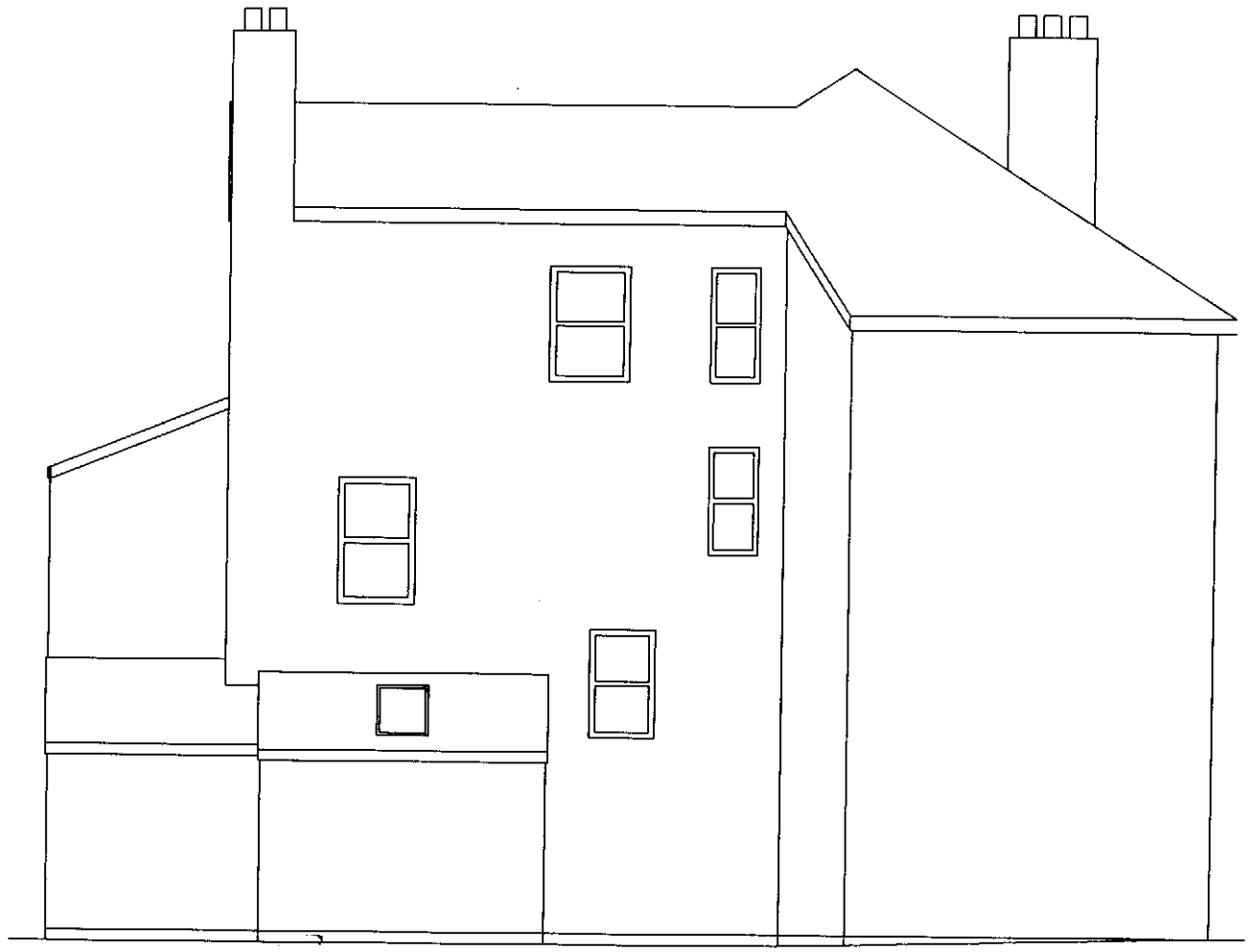

Proposed Side Elevation

	Location 137 Beech Road, Chorlton-cum-Hardy, Manchester. M21	Title Proposed rear extension and change to shop front sign.	Scale 1:100	Date 23rd March 2008	Drawing number 02
			Drawn by AH	Client Mr Martin Holland	revision

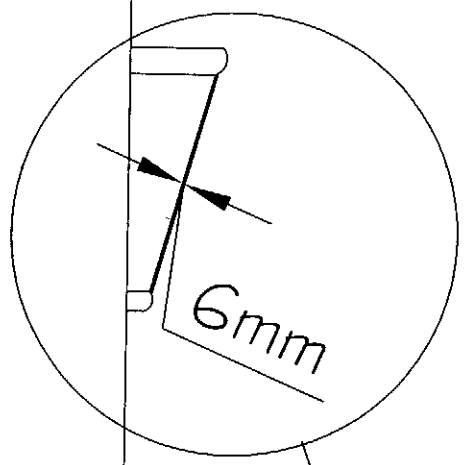

Cross section showing new signage positioned in existing shopsign spaceabove the shopfront window.

SIDE VIEW

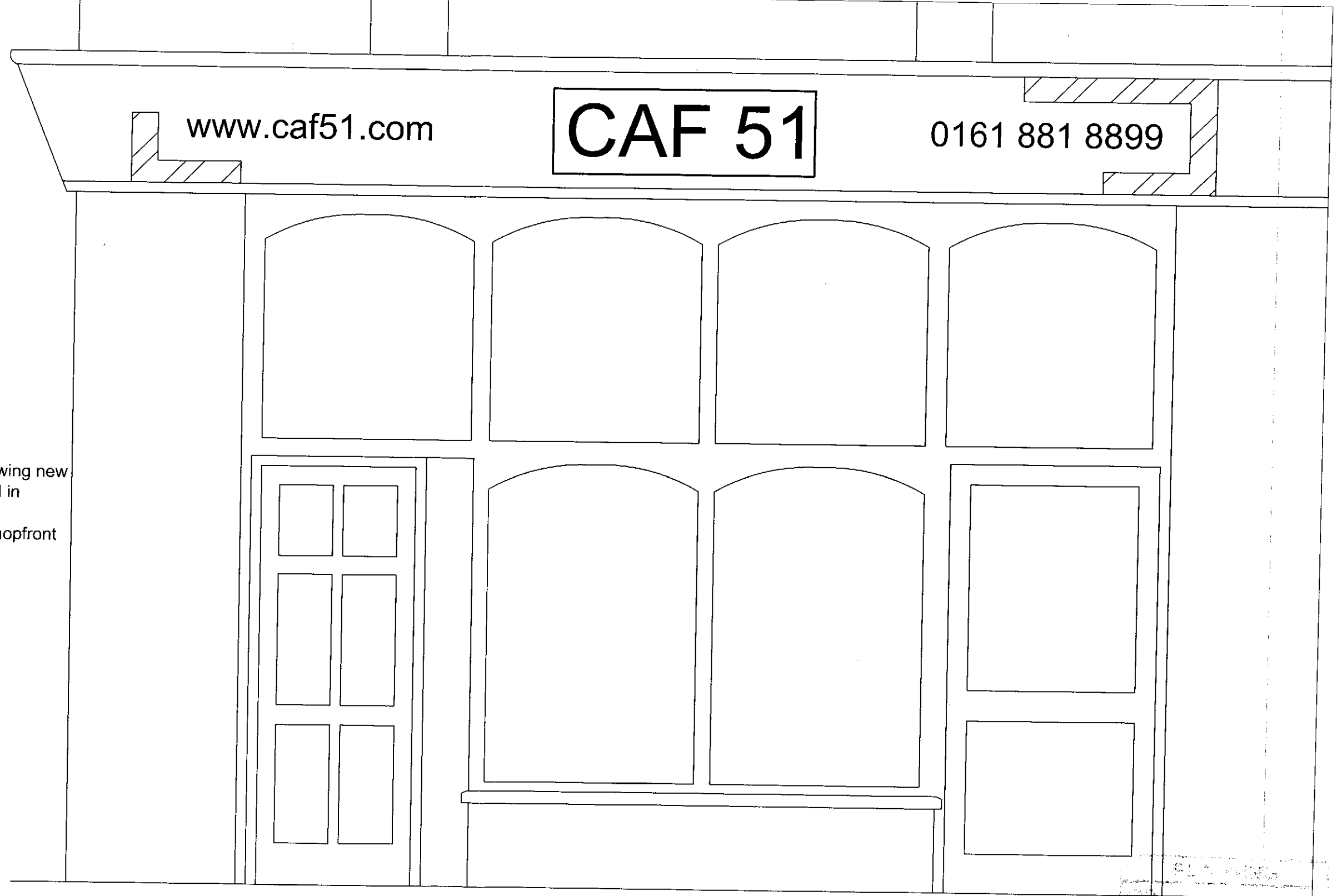

FRONT ELEVATION

CROSS SECTION AND SHOP FRONT AS PROPOSED	Location 137 Beech Road, Chorlton-cum-Hardy, Manchester. M21	Title Proposed change to shop front sign.	Scale 1:50	Date 15th April 2008	Drawing number 04
			Drawn by AH	Client Mr Martin Holland	revision