FACSIMILE COVER SHEET

ISG

Date:

ISG Regions Limited

To:	Leo Yates
Fax No:	0161 234 5588
Company	Corporate Technical Services - Manchester City Council
Subject:	St James School - Kawneer Sections
Sender:	Emma Roileau

YOU SHOULD RECEIVE 5 PAGE(S) INCLUDING THIS COVER SHEET.

IF YOU DO NOT RECEIVE ALL THE PAGES, PLEASE CALL 01274 868700

Hi Leo,

please find attached specification for a typical Kawneer section.

Kind Regards

Emma

ISG Regions Limited, Westwood house, Greenwood Office Park, Regent Road, Salford, M5 4QH
Tel: 0161 868 1750 Fax: 0161 8691758
info@isgtotty.com www.isgtotty.com
Registered in England no: 480103

NOTE: This fax transmission is confidential and intended for the addressee only. It may contain privileged and confidential information. If you are not the person or organisation to whom it is addressed, you must not copy, distribute, or take any action in reliance upon it. If you have received this fax in error, please notify us immediately by telephone or fax and return it to us by post. We will reimburse your expenses.

SPECIFICATION AA™ 600 Series WINDOW

ISSUE 2

Introduction

- The Kawneer AA™ 603 Tiltturn Window is based on the tried and tested design principles of the Kawneer AA™ 600 Series Window & Door System.
- Incorporates polyamide thermal break to ensure compliance with Document L.
- The system has been exclusively designed, developed and tested by Kawneer UK. Installation contracts are carried out by authorised dealers.

Product Definition

- Tiltturn - tilt for ventilation, open in for cleaning. Options - side hung, bottom hung, fixed light *
- Dual colour/single colour option
- Accommodates infills up to 36mm with EPDM gaskets
- Drained/ventilated weathering
- Snap on glazing beads
- Box bead up to 38mm
- A range of structural and coupling mullions available - suitable for composites and ribbon windows
- Suites with Kawneer AA™ 601 Casement Window, AA™ 602 Pivot Window, AA™ 603 Tilt Slide Door, AA™ 605 Door, Curtain Walling and Framing products
- Night ventilation option available to comply with Document F
- Part of Kawneer's totally integrated AA™ 600 Series Window & Door System

Reference Documents

- BS EN 755 – Extruded aluminium profiles
- BS 3987 – Specification for anodic coatings
- BS 6496 – Specification for powder organic coatings
- BS 6375 – Part 1 – Classification of weathertightness
- BS 6375 – Part 2 – Specification for operation and strength
- BS 4873 – Specification for aluminium alloy windows
- BS 4255 – Part 1 – Specification for non-cellular gaskets
- ASTM C509-94 – Specification for cellular gaskets
- ISO 9001:2000 – Quality management system
- The NPL Wall Guarded hot box to BS EN ISO 12567-1

Weather Performance to BS 5368

- Air Infiltration – Grade C at 600Pa
- Watertightness – no leakage at 600Pa
- Wind Resistance – up to 2400Pa*

*Wind resistance is based upon single opening/fixed lights into punched openings. Coupling sections and muntins are selected to suit required windloads and deflection ratios.

Details of the Kawneer product tests are available from the Technical Services Department at Runcorn.

Product Features

- Tiltturn
- Side Hung
- Bottom Hung * ST. JAMES School Gorton.
- Multipoint locking
- Clamp on hinges
- Friction on the stay arm (Reduces slamming effect)
- Built in vertical and horizontal adjustment of opening vent
- 90° and 45° corners available
- Choice of muntins and coupling mullions
- Choice of frame and vents for all applications
- Standard Tiltturn profiles can be used to accommodate Tilt Slide Doors without the need for additional profiles

ALCOA

Kawneer
An Alcoa Company

600 Series

Accessories

- Locking and non-locking handle
- Turn lock option
- Fixing lugs
- Firemen's axe
- Odd and even leg outer frame
- Colour co-ordinated handles and hinges
- Optional security hardware
- Aluminium or polyamide operating rod available

Glazing

- Glazing and panels up to 36mm thickness can be accommodated.

Construction

- Mechanical corner cleats crimped and bonded together with stainless steel corner brace.
- Weathering is achieved by the use of EPDM gaskets
- Pressure equalised system.

Materials

- Aluminium profiles are extruded from 6063T6 alloy. Screws and components are corrosion resistant materials.

Surface Finishes

- Over 130 standard and 31 metallic Kawneer Permacover and Permacover Plus polyester paint finishes are available. A range of standard and coloured anodised finishes are also available. Colour samples are available on request from the Marketing Department at Runcorn. The finishes coatings are covered by standard guarantees; 15 years gloss, 25 years matt and metallic for Permacover and up to 25 years for anodised. Guarantees are subject to application and Kawneer acceptance in marine, industrial, swimming pools or other aggressive atmospheres.

Fabrication and Installation

- All Kawneer products are fabricated and installed by a network of trained authorised Kawneer dealers, offering national support at local level. The Kawneer Training Centre provides specific product knowledge training, installer training, registration and certification in accordance with the CWCT (Centre for Window and Cladding Technology). For dealers in your area contact the Sales Department at Runcorn.

Cleaning and Maintenance

- Cleaning and maintenance instructions are available from our Head Office at Runcorn.

NBS Specification

- A product specific specification based on the NBS Specification is available from our Head Office at Runcorn.

London Office
41-42 Eastcastle Street
London W1W 8DU
Tel: 020 7409 1422
Fax: 020 7409 1456

Kawneer UK Ltd
Astmoor Industrial Estate
Runcorn, Cheshire WA7 1QQ
Tel: 01928 502500
Fax: 01928 502501

E-mail: kuk.kawneer@alcoa.com
www.alcoa.com/bcs

Kawneer
An Alcoa Company

ALCOA

Kawneer
An Alcoa Company

DETAIL SHEETS

AA600 SERIES
Profile Information

ISSUE A D6006-13

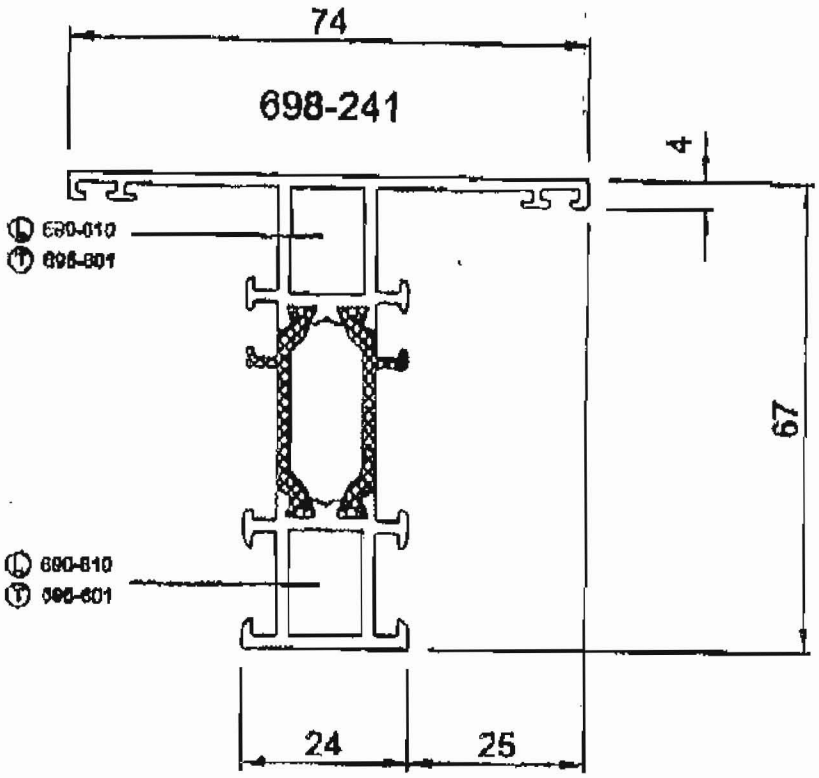

ST JAMES.

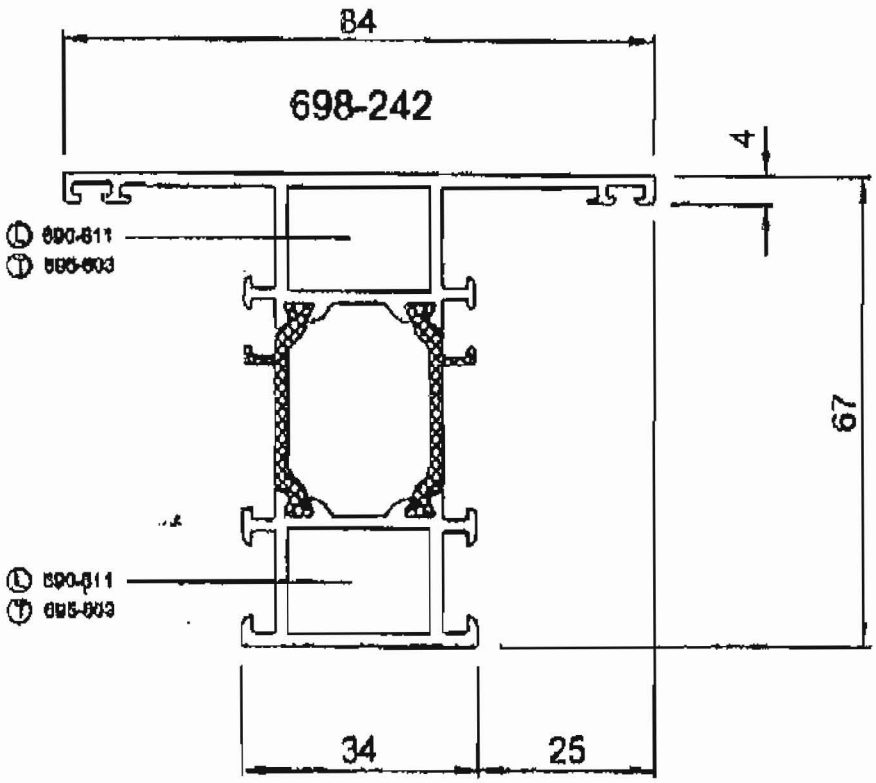

L CORNER CLEAT
T MUNTIN CLEAT PKG

Kawneer
An Alcoa Company

DETAIL SHEETS

AA600 SERIES
Profile Information

ISSUE A D6005-16

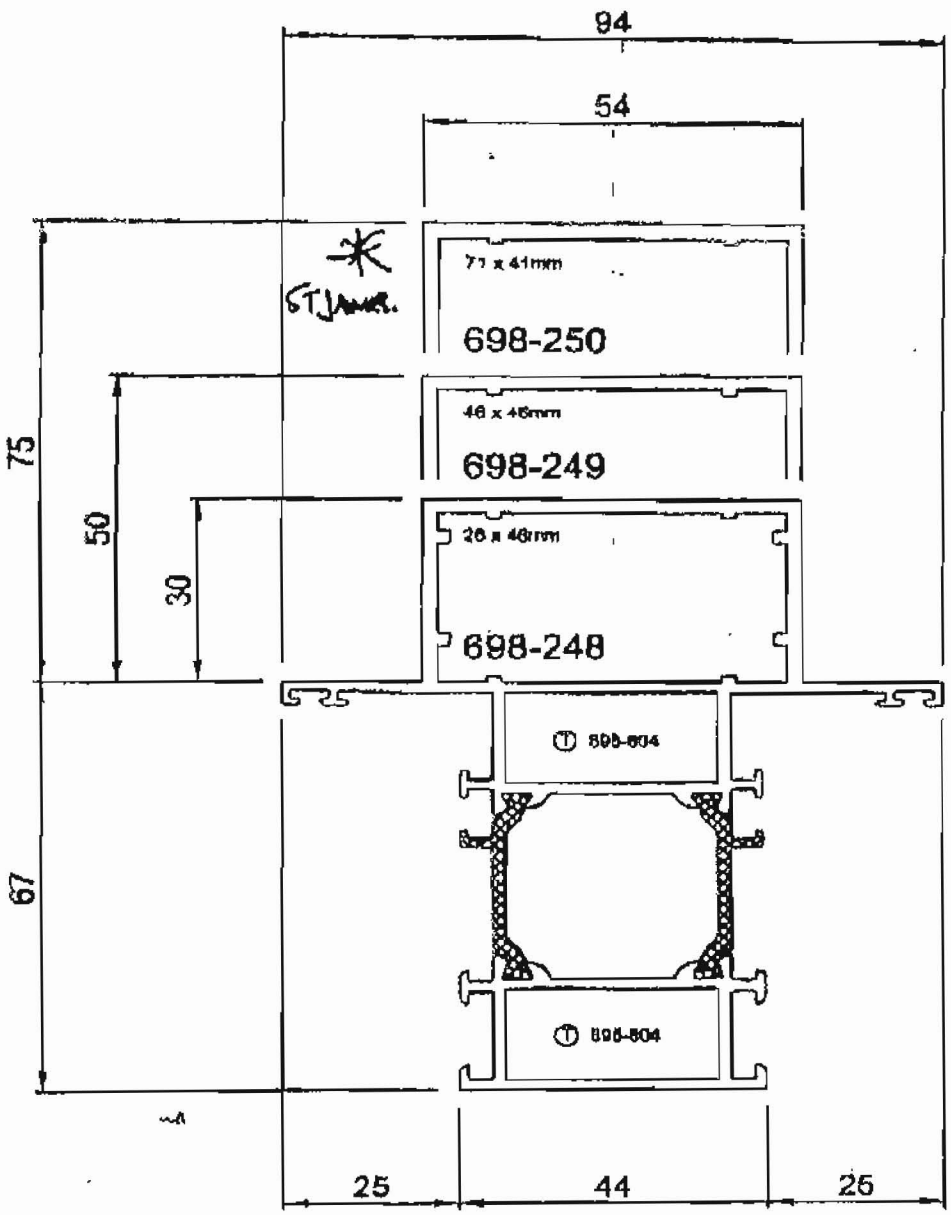

Ⓣ MUNTIN CLEAT PKG