620mm Blank Right Hand End Module

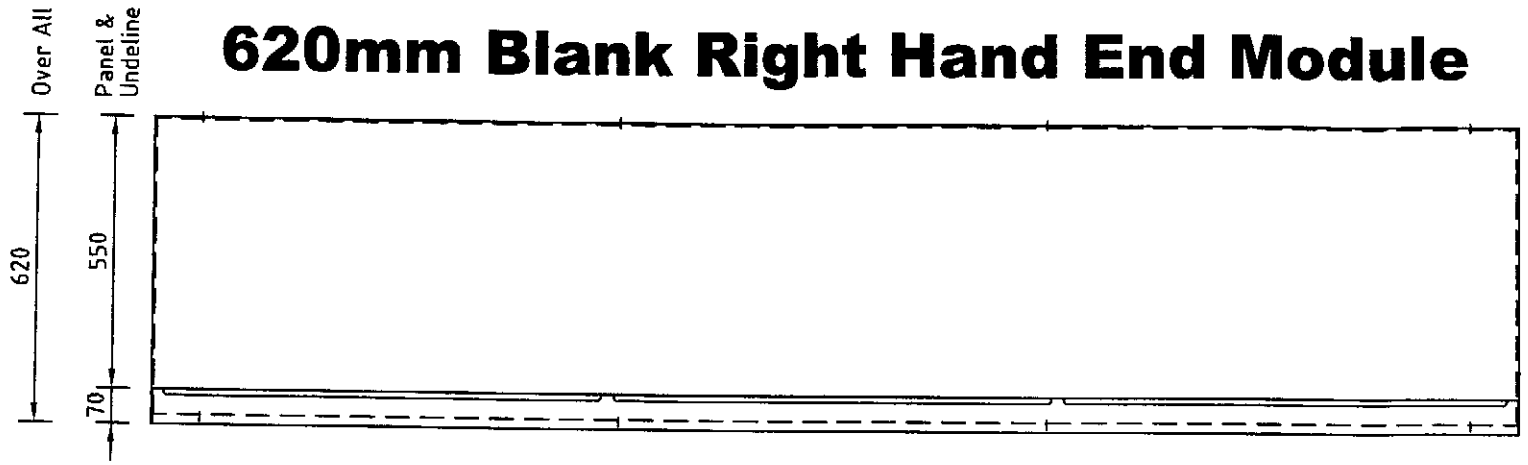

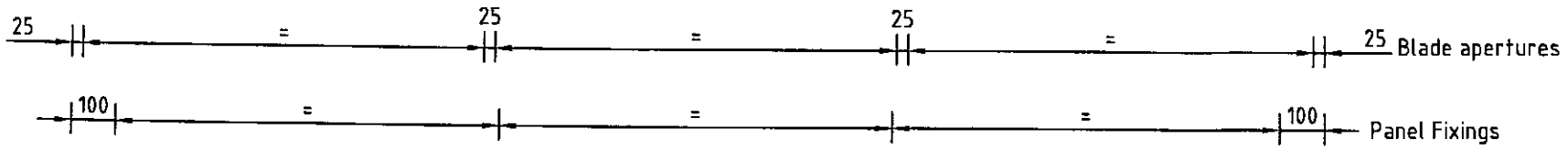

Face Elevation of Panel

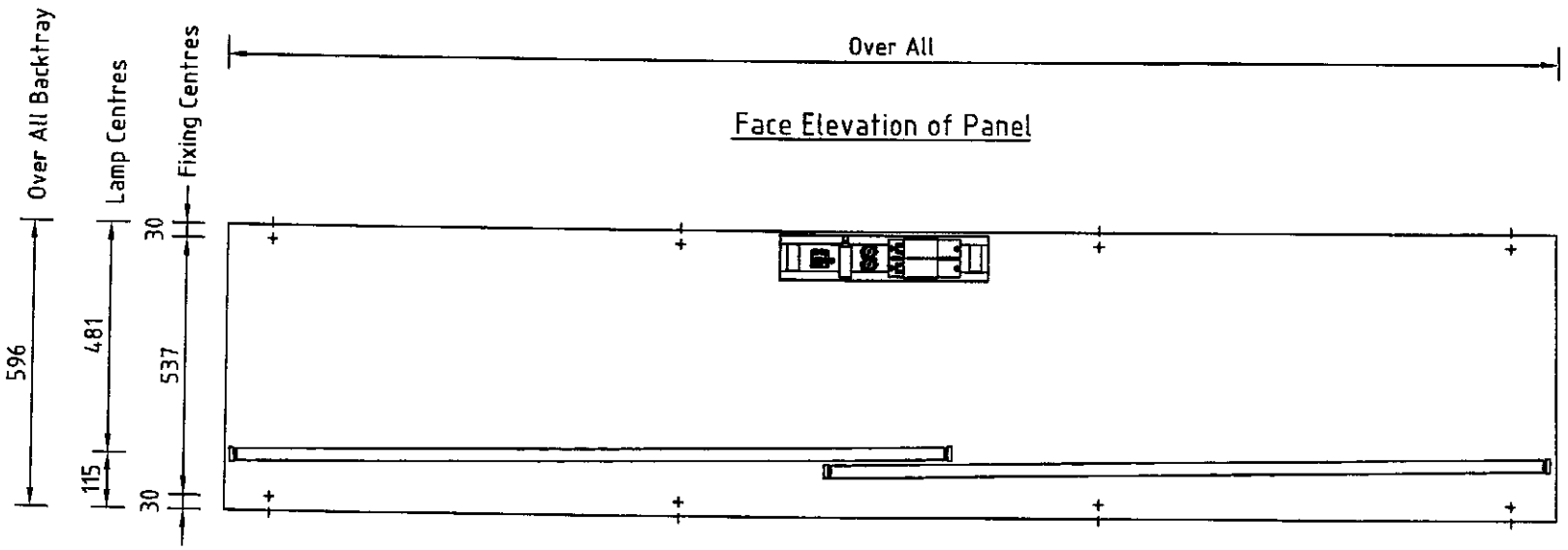

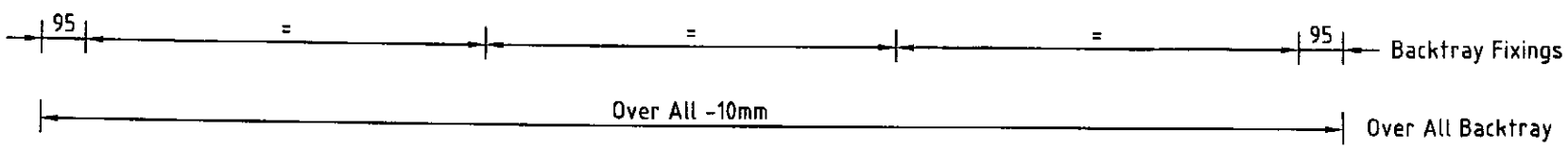

Face Elevation of Backtray

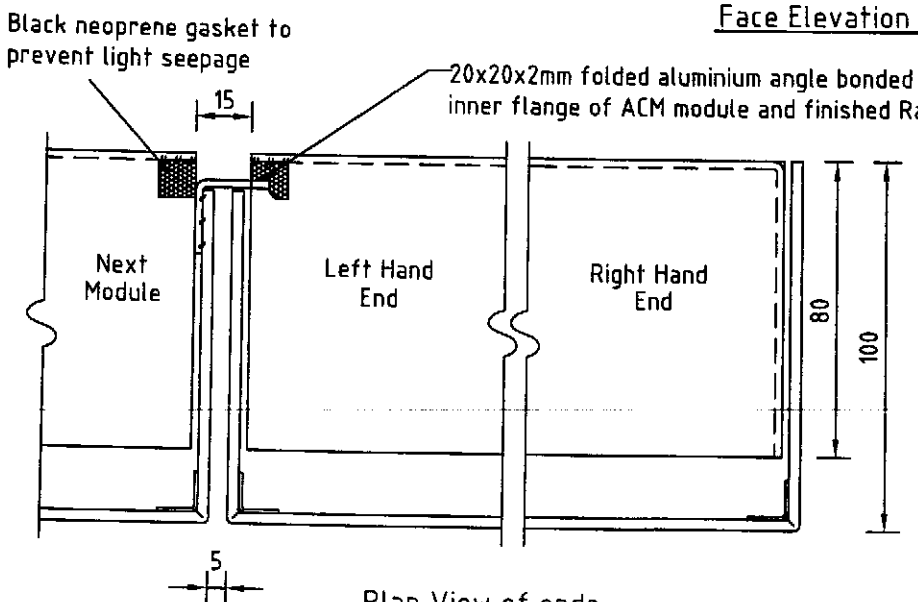

Plan View of ends

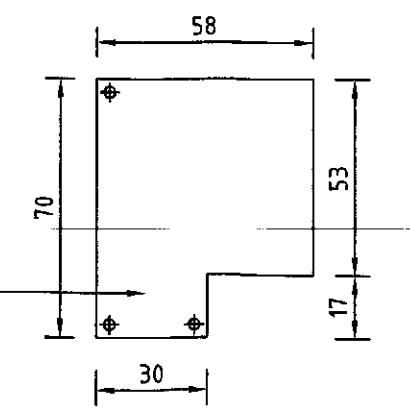

End Cap to underline

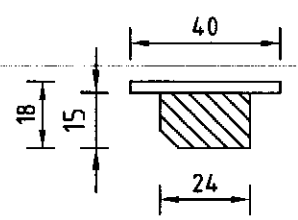

Blade Detail

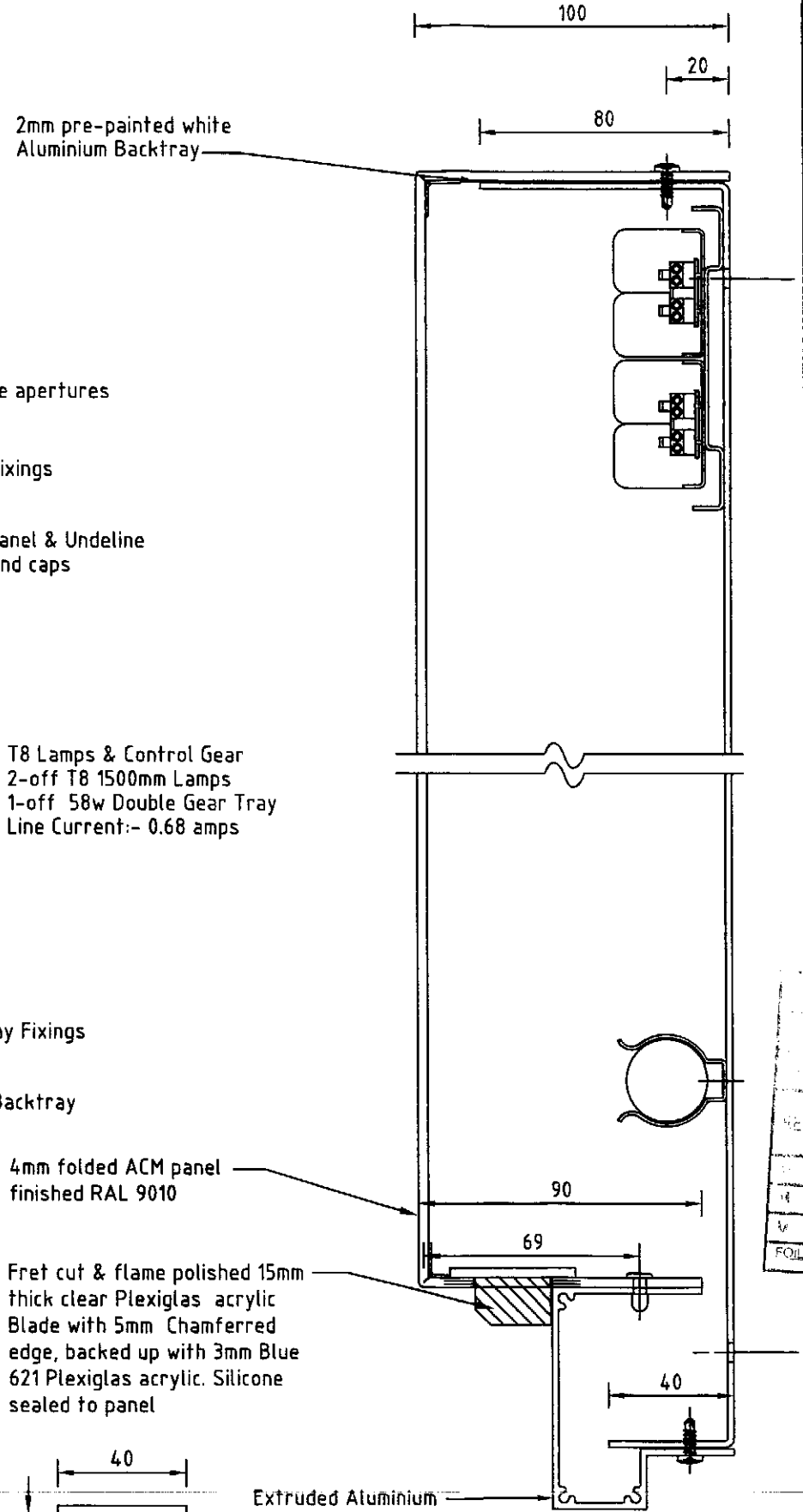

Section Through

T8 Lamps & Control Gear
2-off T8 1500mm Lamps
1-off 58w Double Gear Tray
Line Current:- 0.68 amps

DO NOT SCALE

© Barclays Bank PLC 2007. All rights reserved.

The entire content of this drawing and all information shown thereon is the exclusive property and copyright of Barclays Bank PLC and all rights are reserved. The drawing and the contents thereof, including any part(s) thereof, may not be reproduced, copied, downloaded, transmitted, adapted or modified in any medium or in any manner or form without the prior written permission of Barclays Bank PLC.

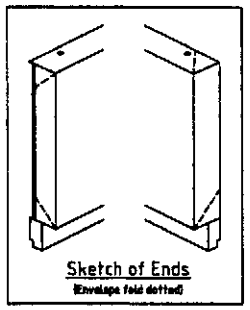

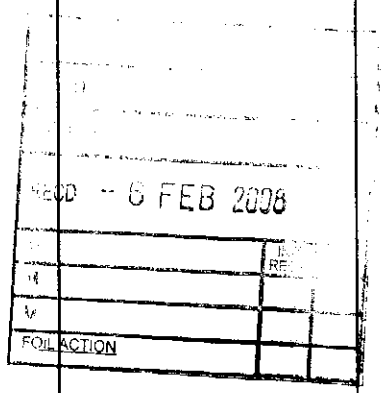

Fascia Signage

BARCLAYS

620mm Blank Right Hand End Module

Scale A3 1:2 1:15	Drawn DD	Checked PS	Date 26/06/07
Drg.No 620mm R-HBM			Revision

620mm Blank Left Hand End Module

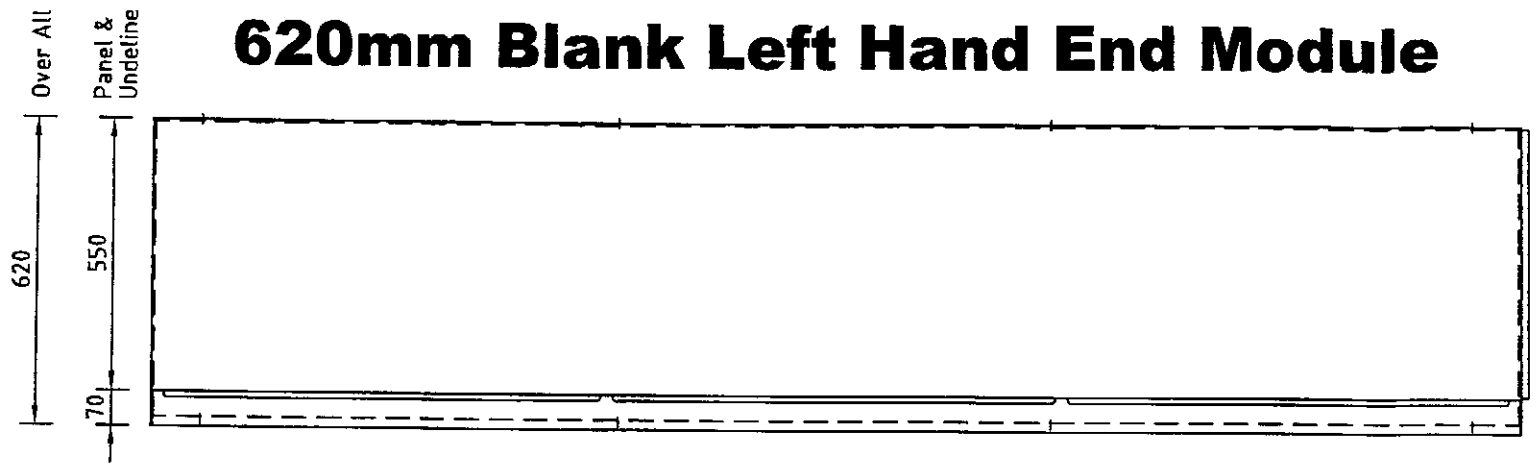

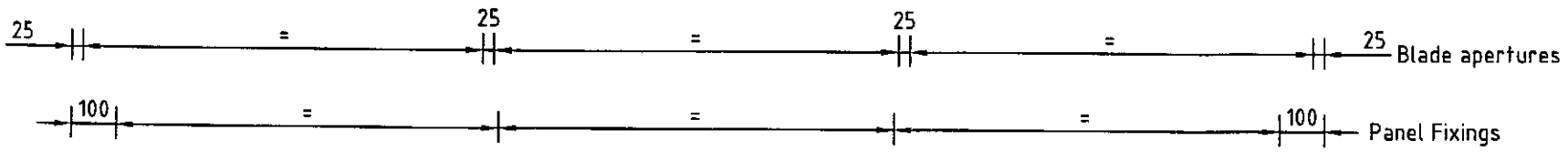

Face Elevation of Panel

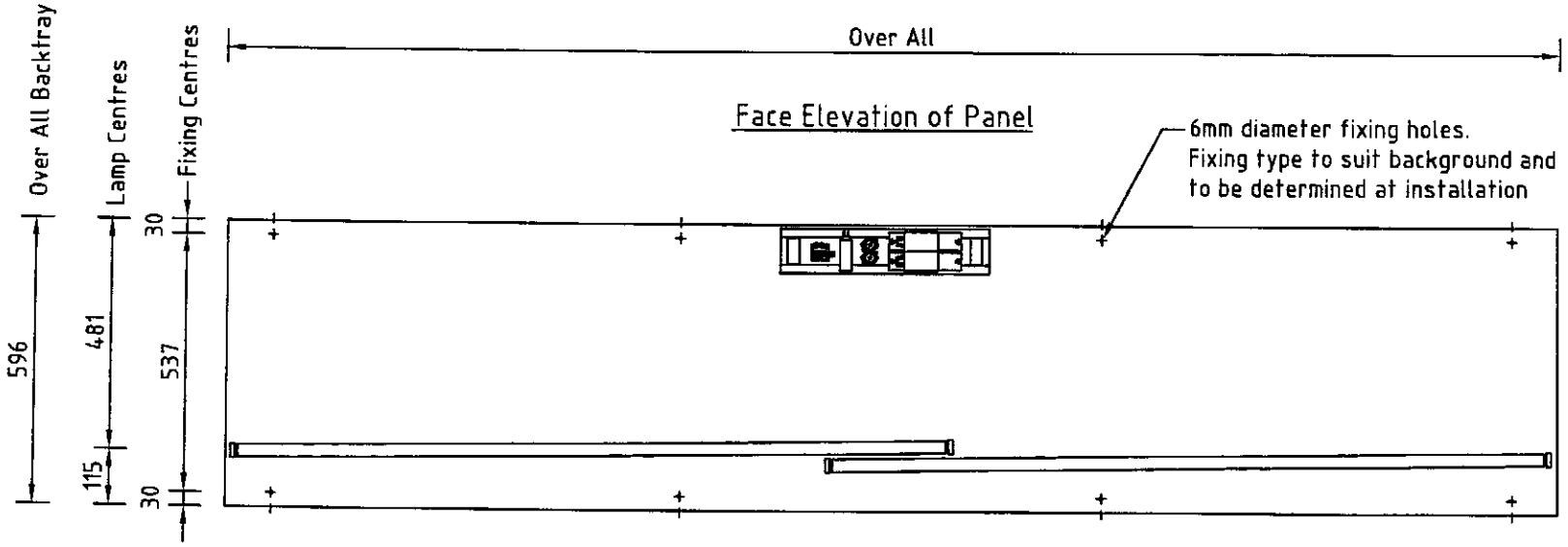

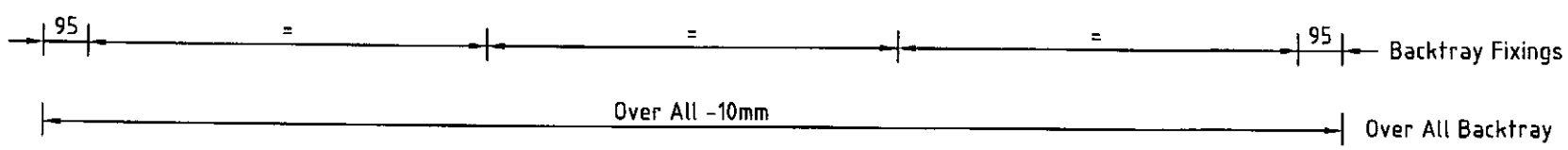

Face Elevation of Backtray

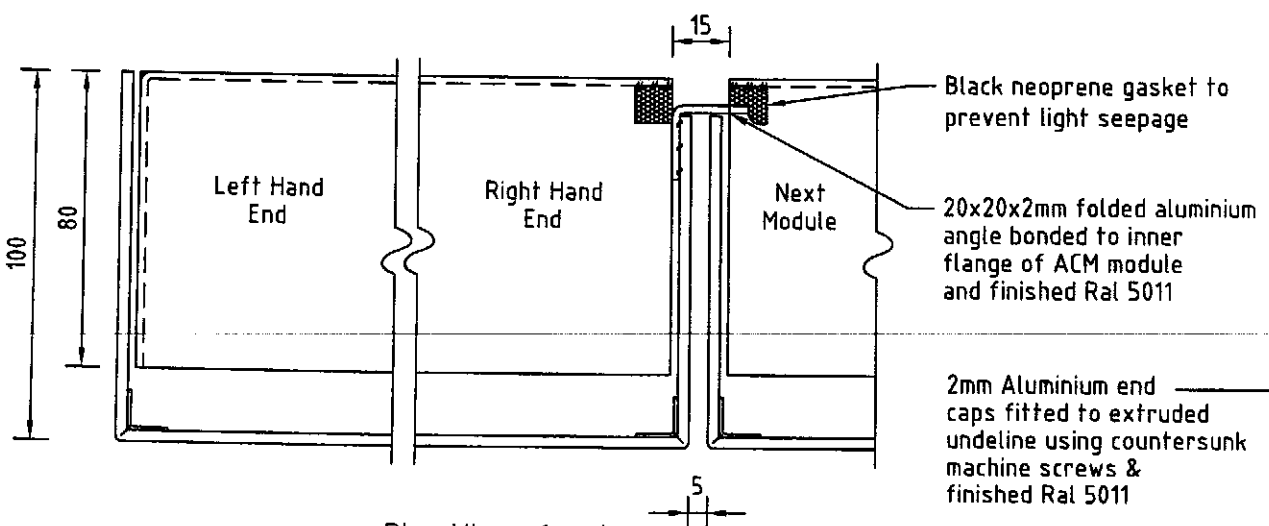

Plan View of ends

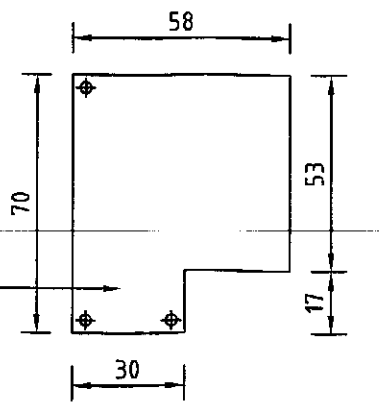

End Cap to underline

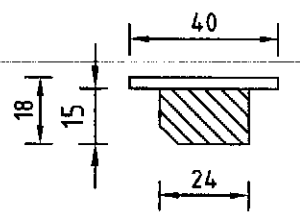

Blade Detail

T8 Lamps & Control Gear
2-off T8 1500mm Lamps
1-off 58w Double Gear Tray
Line Current:- 0.68 amps

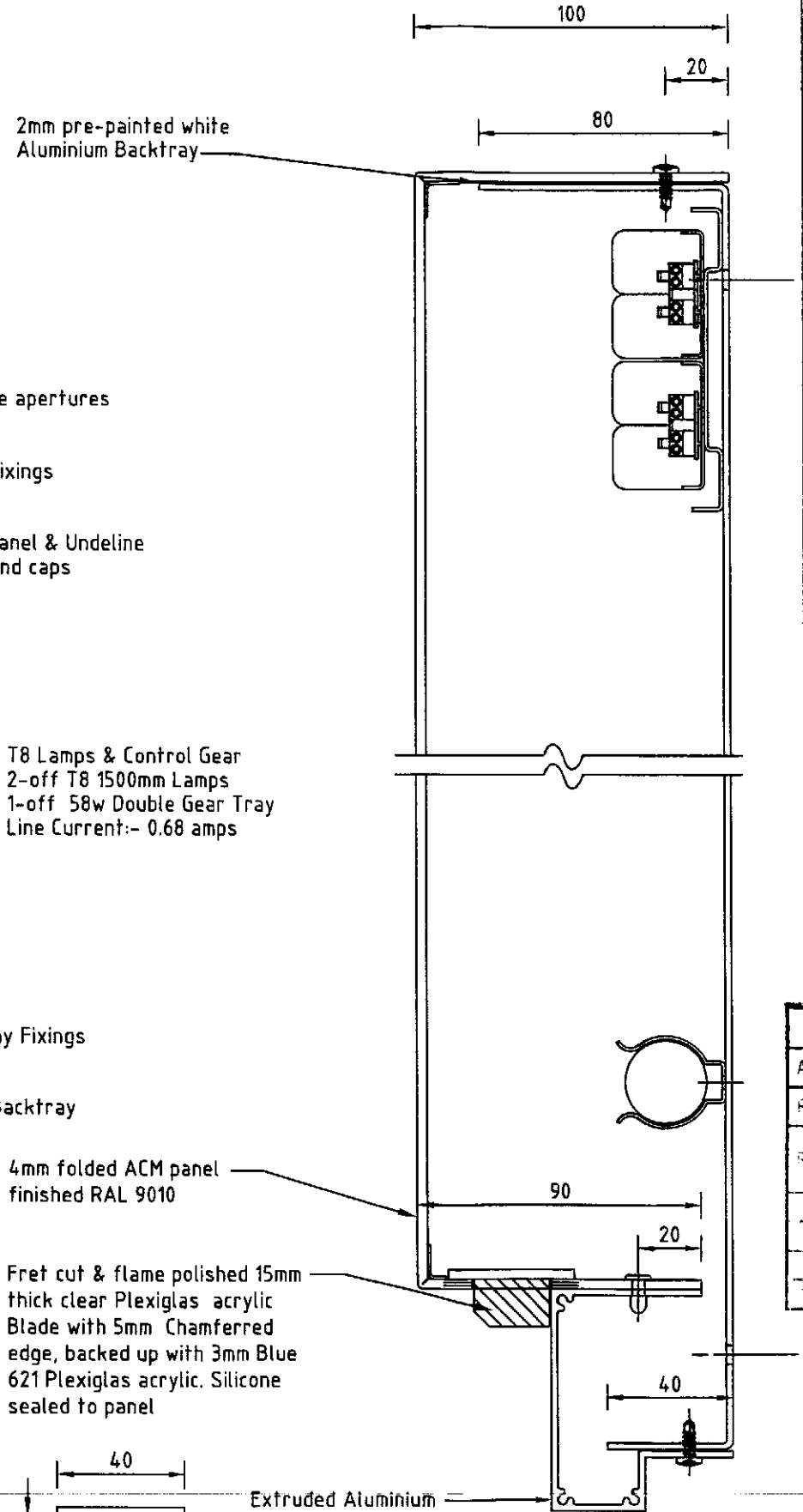

Section Through

DO NOT SCALE

© Barclays Bank PLC 2007. All rights reserved.

The entire content of this drawing and all information shown thereon is the exclusive property and copyright of Barclays Bank PLC and all rights are reserved. The drawing and the contents thereof, including any part(s) thereof, may not be reproduced, copied, downloaded, transmitted, adapted or modified in any medium or in any manner or form without the prior written permission of Barclays Bank PLC.

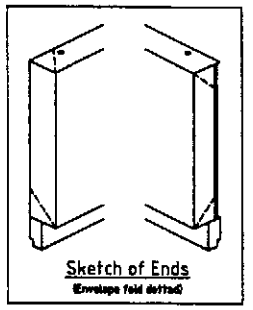

Sketch of Ends
(Envelope fold dotted)

PLANNING
ACK'D
REPLIED
RECD - 6 FEB 2008

Project: Fascia Signage

BARCLAYS

Drawing Title: 620mm Blank Left Hand End Module

Scale	Drawn	Checked	Date
@A3 1:2 1:15	DD	PS	28/06/07

Dwg.No 620mm L-HBM