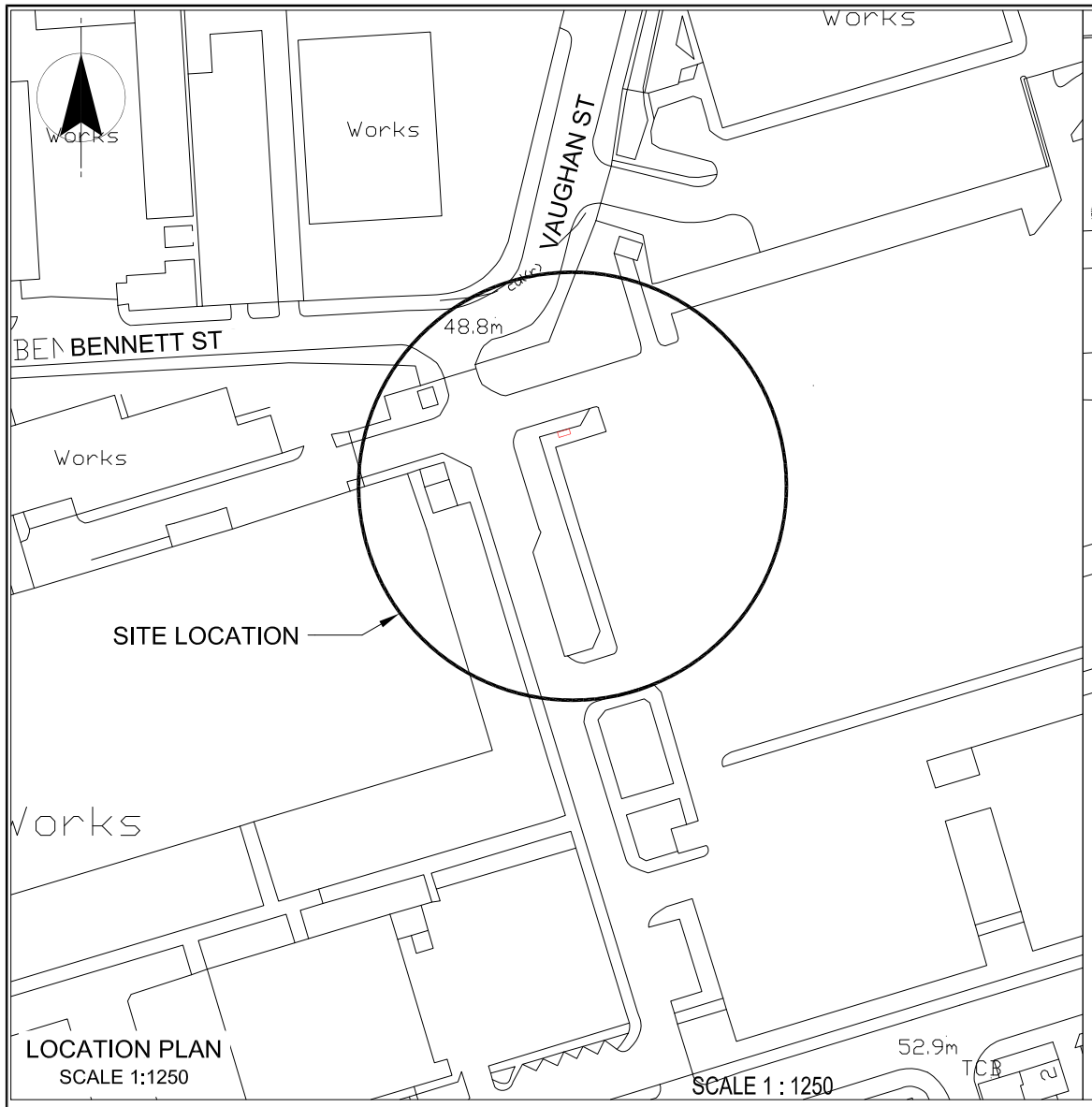

LOCATION PLAN
SCALE 1:1250

SCALE 1 : 1250

m50 0 50m

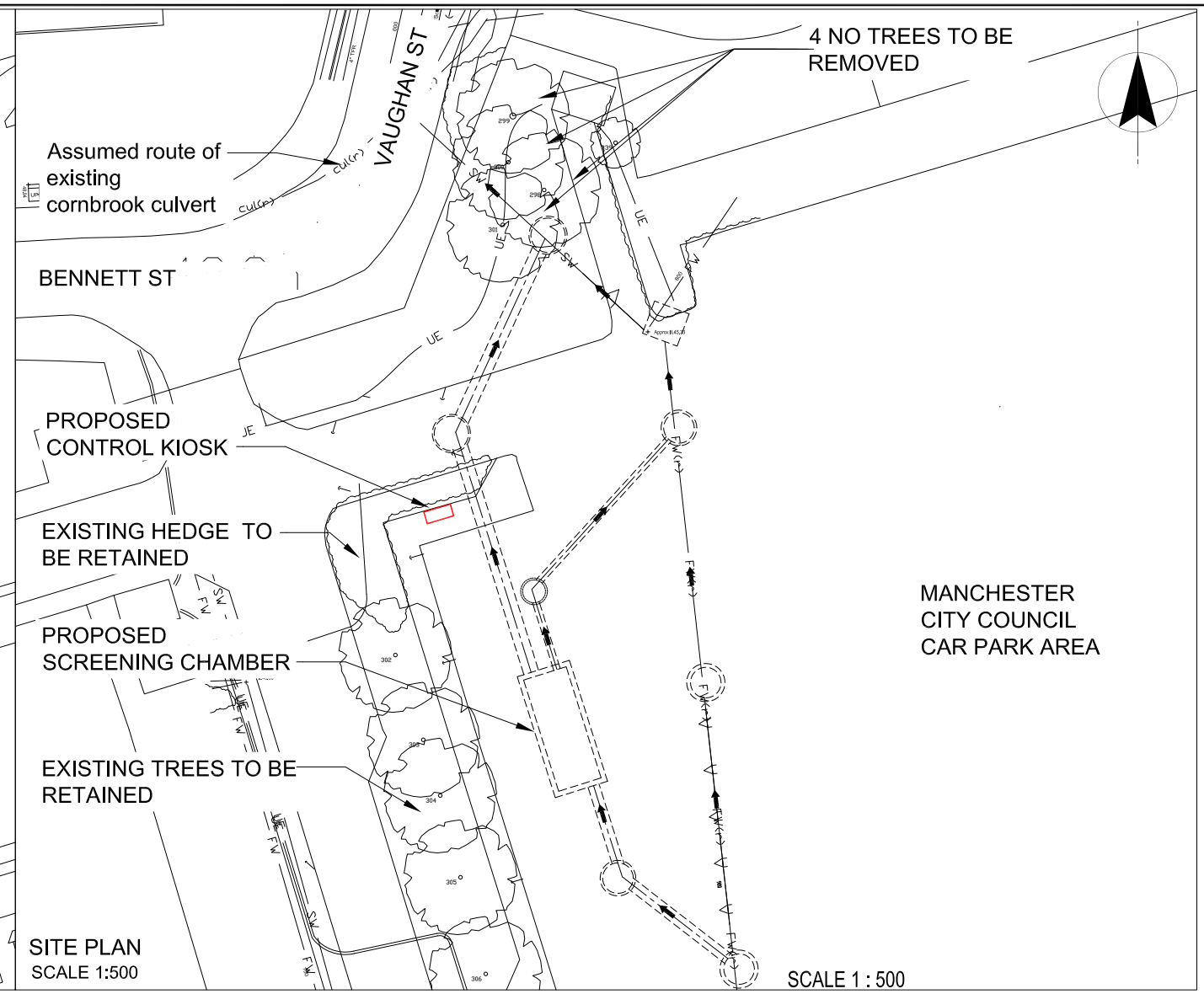

SITE PLAN
SCALE 1:500

SCALE 1 : 500

m10 0 40m

Kiosk construction
Colour dark green 14C39 to BS 4800.

Wall panels to be externally pigmented gelcoated backed with GRP laminate to either side of an internal core of materials, (timber, plywood, foam or steel as necessary).

Control kiosk sitting on concrete plinth.

All vents to be fitted with insect proof screens.

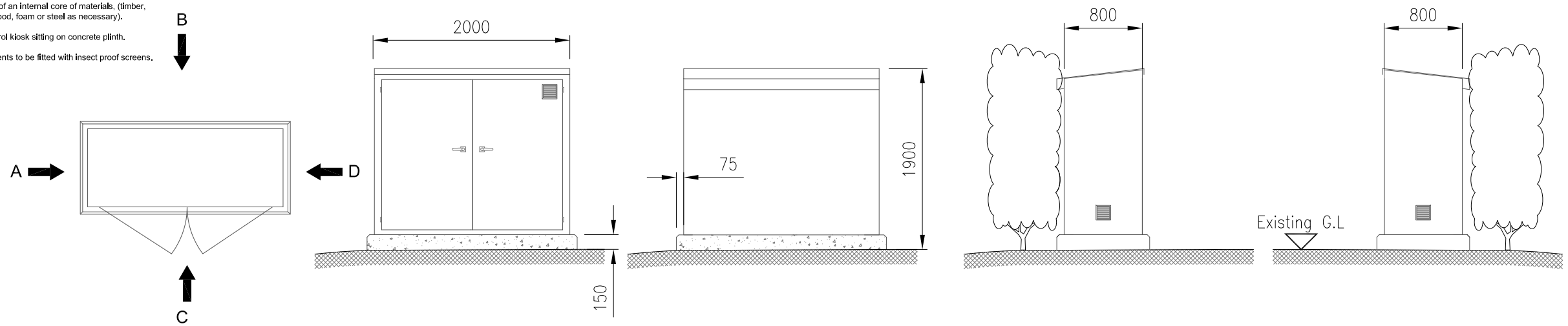

PLAN VIEW ON KIOSK
Scale 1:50

KIOSK ELEVATION LOOKING IN DIRECTION OF ARROW "C"
Scale 1:50

KIOSK ELEVATION LOOKING IN DIRECTION OF ARROW "B"
Scale 1:50

KIOSK ELEVATION LOOKING IN DIRECTION OF ARROW "A"
Scale 1:50

KIOSK ELEVATION LOOKING IN DIRECTION OF ARROW "D"
Scale 1:50

SCALE 1 : 50

m1 0 4m

NOTES

1. All dimensions in millimetres and all levels in metres AOD unless noted otherwise.

LEGEND

- Area requiring planning permission area = 2.04m²
- Existing Underground Structure
- Proposed Underground Manhole Structure
- Proposed Underground Structure
- Proposed Underground Sewer
- cs — Existing Combined sewer
- Pipe to be abandoned
- sw — US Storm sewer
- cu(r) — Existing Culvert (from records)
- fw(r) — Existing foul water sewer (from records)

OSMAP
SJ8697

CURRENT ISSUE INFORMATION
B. SITE LAYOUT AMENDED.

VERSION	DRWN	CHKD	REVD		DATE
B	SRB	CB	PTS	FOR PLANNING	13 Jan 12

United Utilities
Solution design supported by MWH

Balfour Beatty Utility Solutions
ZERO HARM
ALL TOGETHER LEARN FASTER

UNITED UTILITIES PLC
CHORLTON BROOK UID's, MANCHESTER Q

MAN0376 BENNETT ST/VAUGHAN ST

PLANNING APPLICATION

SCALE	SHEET SIZE
As Shown	A3
DRAWING NUMBER	REVISION
MAN0376/80021989/00/97/2001	B

©The copyright of this document, which contains information of a proprietary nature, is vested in United Utilities Water PLC. The content of this document may not be used for purposes other than that for which it has been supplied and may not be reproduced, either wholly or in part, in any way whatsoever. It may not be used by, or its contents divulged to any other person whatsoever without the prior written permission of United Utilities Water PLC.
Copyright Acknowledgement: Use of Ordnance Survey map data sanctioned by the controller of H.M. Stationery Office. OS Licence Number 100019326. Crown copyright reserved. Unauthorised production infringes copyright