GENERAL NOTES.
SASHES – MAHOGANY-HARDWOOD
BOX FRAME – RED WOOD – SOFTWOOD.
GLAZING – SINGLE GLAZED GENERALLY.
LEADED LIGHTS – TO MATCH ORIGINAL.

## SECTION X:X (1:2)

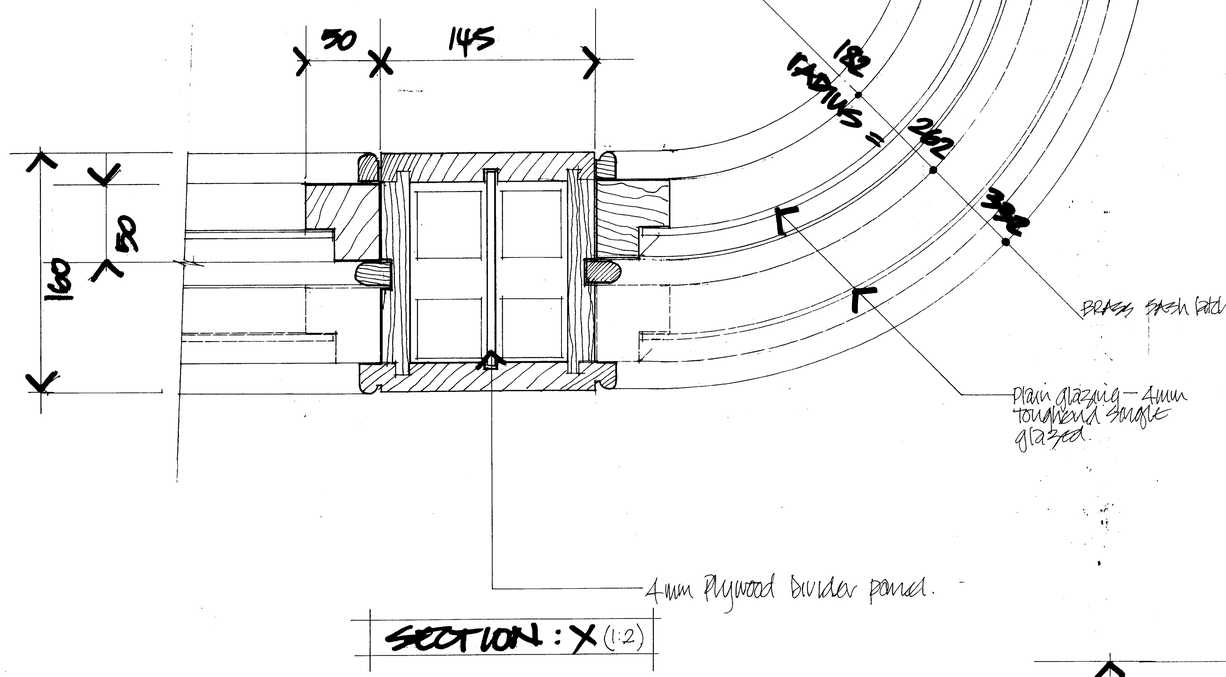


## SECTION Y:Y (1:2)

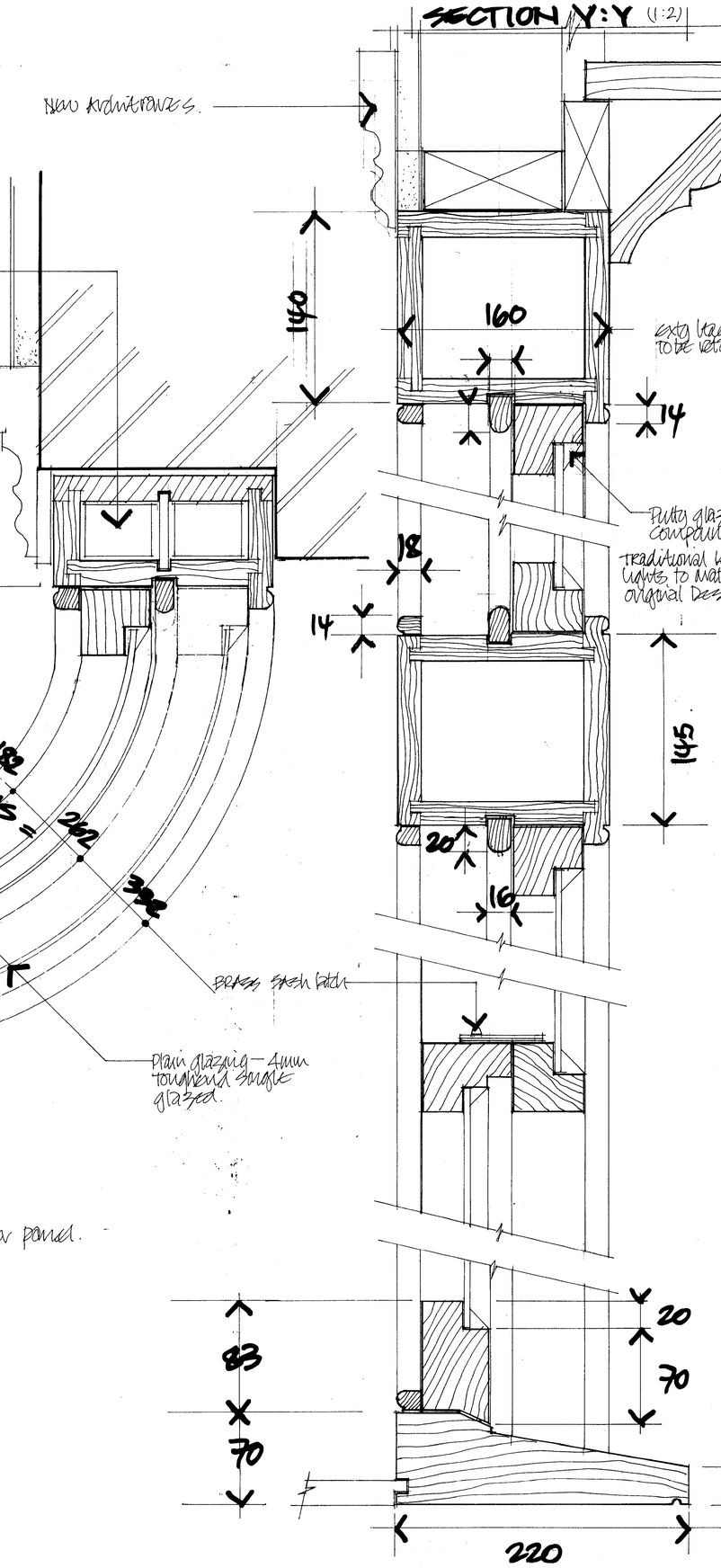


## HORIZONTAL SECTION (1:12½)

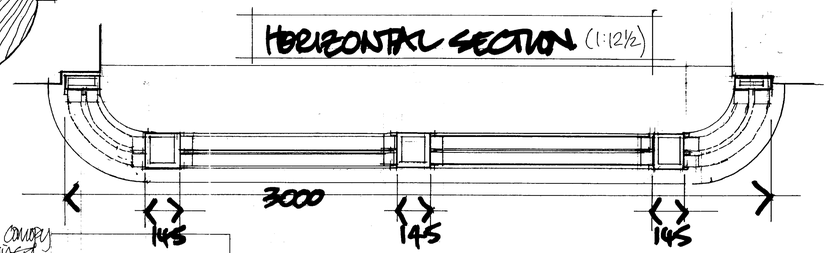


## ELEVATION (1:12½)

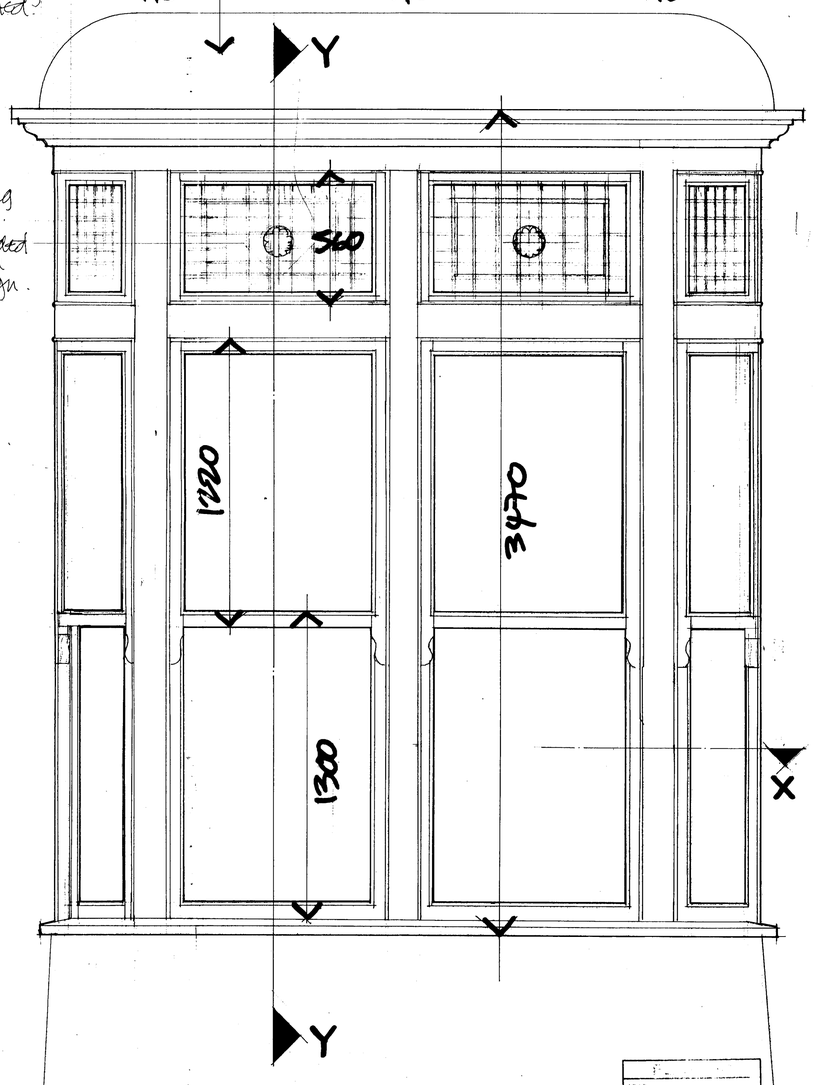


RECD 29 FEB 2008

# PROPOSED REPLACEMENT ORIEL WINDOW

AT: LLOYDS HOTEL, 617 WILBRAHAM RD, M21 9AH.
FOR: J.W. LEES & CO LTD,
GREENGATE BREWERY.
MIDDLETON JUNCTION, M24 2AS.

SCALE: AS SHOWN.
DRAWN: JMP.
12/12/07. DRG 001