DESIGN

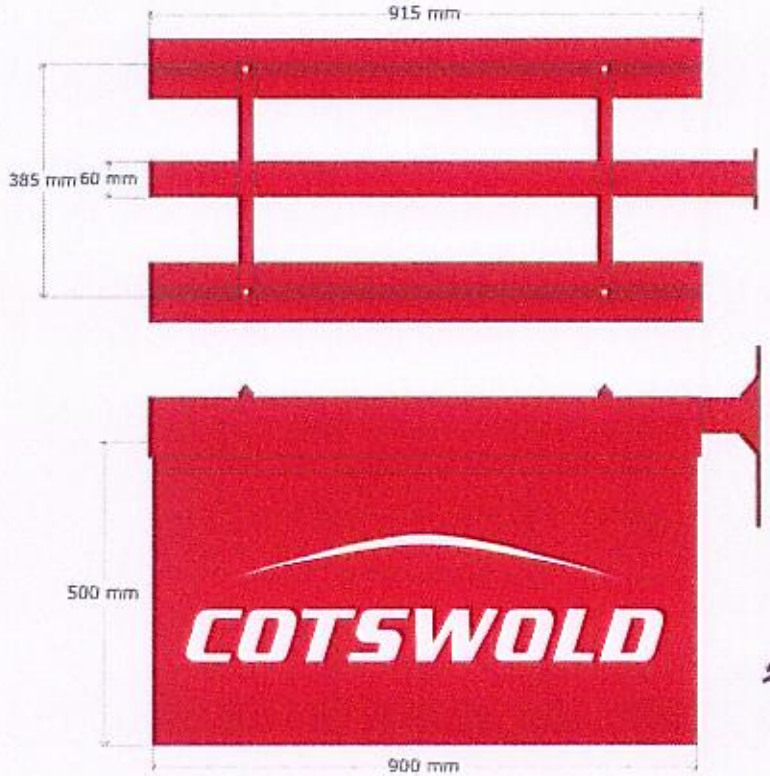

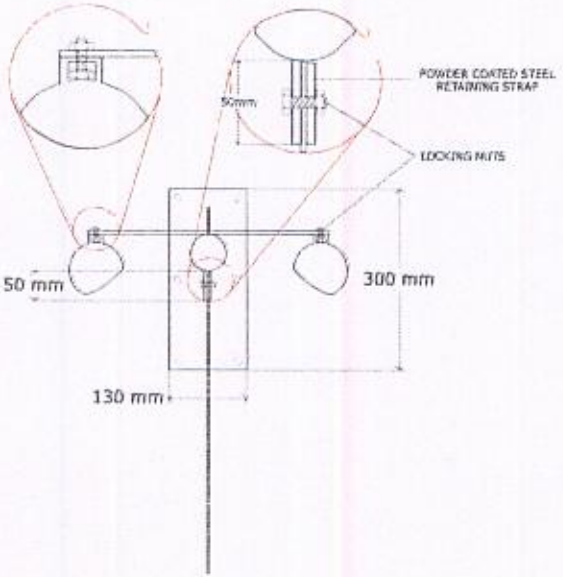

2 No. EXTERNALLY ILLUMINATED (VIA PORTLAND TROUGH LIGHT SYSTEM) PROJECTION SIGN. 2mm ALUMINIUM POWDERCOATED PANEL C/W VINYL DETAIL TO BOTH SIDES.

Sapphire Creative Signmaking

CLIENT	SITE ADDRESS	DRAWING NUMBER	REVISION	DATE	SCALE	DRAWN BY	FILE LOCATION
COTSWOLD	MANCHESTER	5595-2	-	11/04/08	N.T.S	A.BRATTON	K:\SAPPHIRE DRGS MASTER\COTSWOLD\MANCHESTER

THIS DRAWING AND INFORMATION IT CONTAINS IS THE PROPERTY OF SAPPHIRE SIGNS LTD. IT MAY NOT BE USED OR COPIED IN ANY WAY WITHOUT PRIOR WRITTEN CONSENT

RECEIVED 20 - 6 JUN 2008 PLANNING