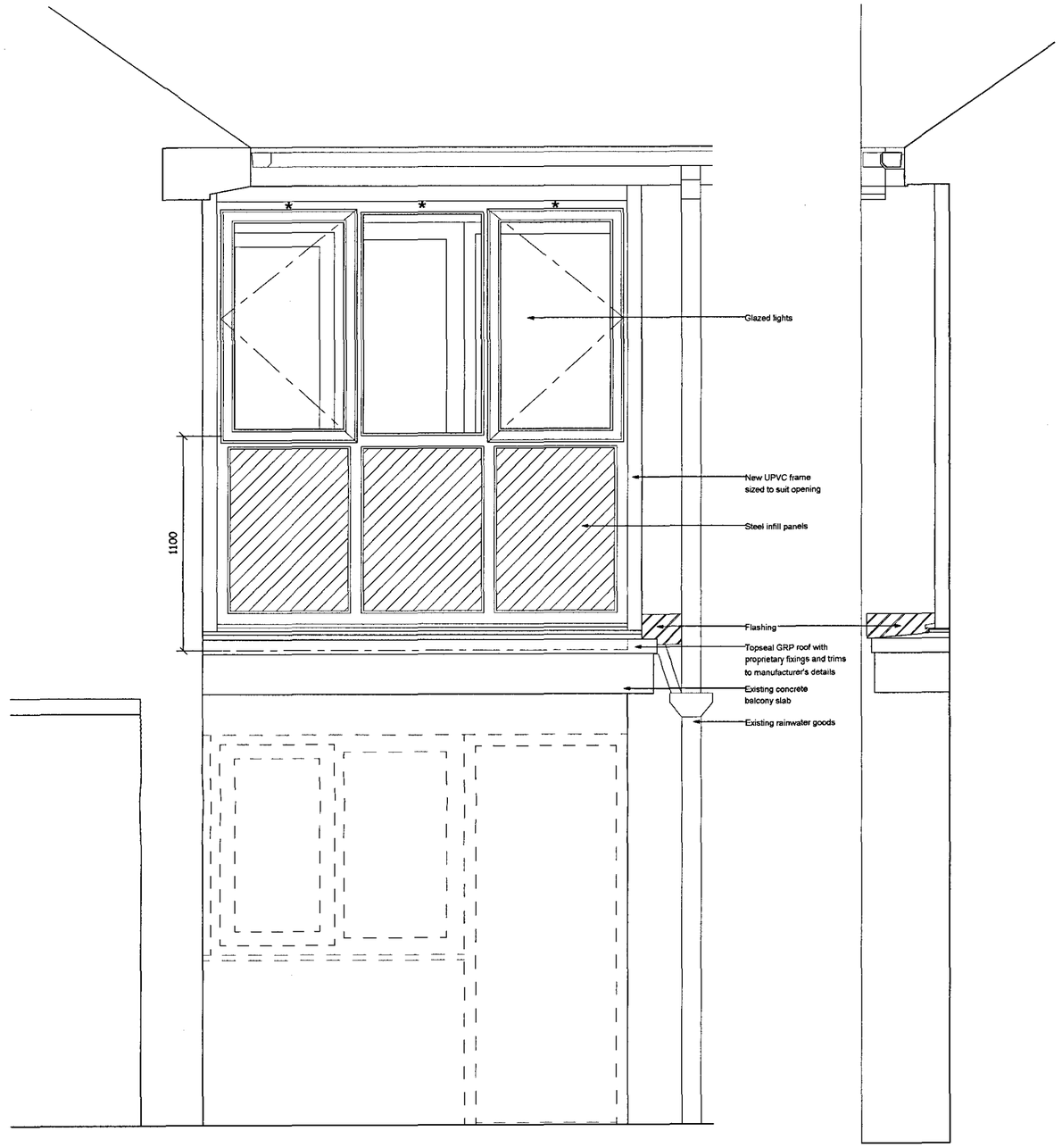

Elevation

Side Elevation

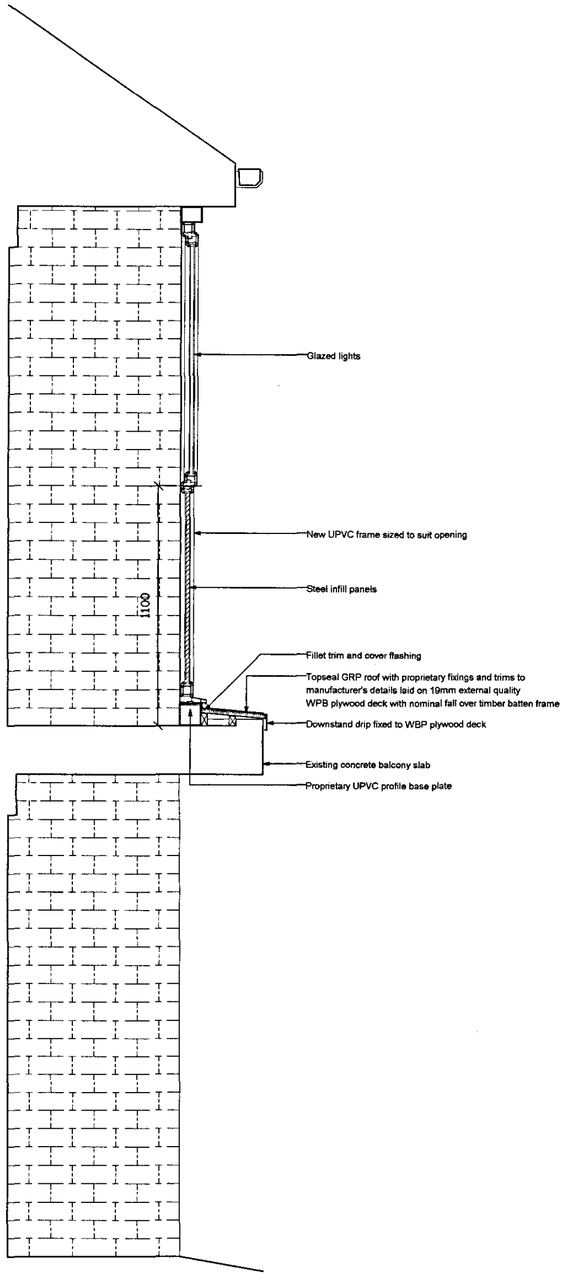

Section A-A

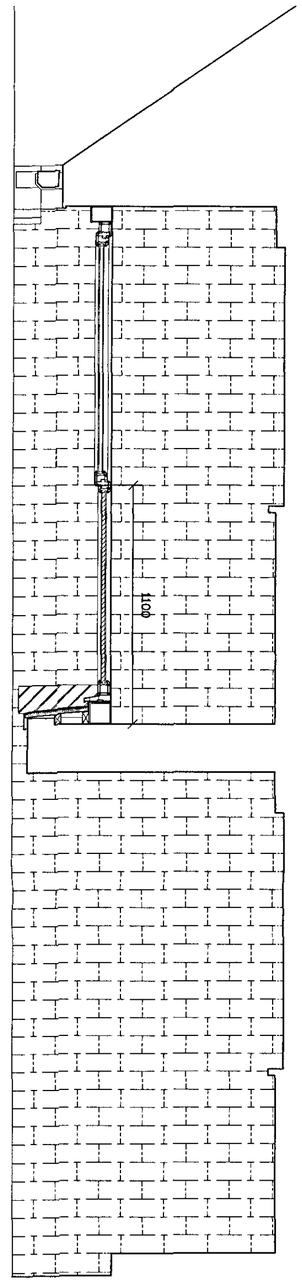

Section B-B

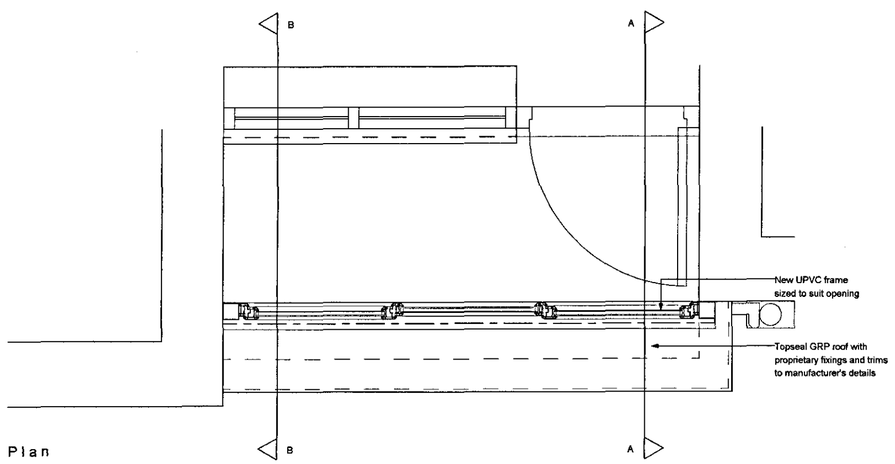

Plan

* DENOTES TRICKLE VENTS
All windows to be provided with trickle ventilation to head members to give an equivalent ventilator area of 30000-35000mm2 (ventilator area dependant on room size to comply with Part F of the Building Regulations

(e) EGRESS WINDOWS
All opening lights are to be provided with min. clear 450mm wide and 450mm high escape openings which gives an unobstructed area 0.35m² when the window is in the open position & egress hinges.
Transom height to be below 1100mm above floor level, site dimensions ESSENTIAL prior to manufacture.

To achieve the necessary egress window width the vertical mullions may not be able to be equal widths.
Window manufacturer to provide details and sizes for approval.

DOUBLE GLAZING
All units to be double glazed with outer leaf 7.5mm laminated inner leaf 4mm toughened k-glass with Low-E coating to comply with Part N Building Regulations and Secured-by-Design requirements.

NOT FOR CONSTRUCTION

Do not scale from this drawing.
All dimensions to be checked on site by contractor prior to construction.

Client	Description			Job No	2437
Willow Park Housing Trust	Plan, Sections and Elevation as Proposed			Drg No	03
Job	Drawn	Date	Scale	Rev.	-
Cottage Flat Improvements	CD	28/11/2011	1:20		

Bernard Taylor Partnership Ltd.
Architects
ELIZABETH HOUSE, 486 DIDSBURY ROAD, HEATON MERSEY
STOCKPORT, CHESHIRE, SK4 3BS
Tel: 0161-443 1221
Fax: 0161-442 1672
E-mail: Info@BernardTaylor.co.uk