PLANNING
BUILDING CONTROL
22 AUG 2013

Parking bays within site.
Sub-base 175mm granular m.o.t. 1 or 2 well compacted. Formation level to be compacted and rolled with 10T min dead or road roller.
Base course, 100mm compacted thickness 20mm size dense bit mac base course to BS4987 part 1: 1988 clause 6.5.
Wearing course, 35mm compacted hot rolled asphalt to BS 594 part 1: table 3: column 9. Design 30/14 with 20mm nominal size coated chippings.

Site access road
Sub-base 175mm granular m.o.t. 1 or 2 well compacted. Formation level to be compacted and rolled with 10T min dead or road roller.
Base course, 100mm compacted thickness 20mm size dense bit mac base course to BS4987 part 1: 1988 clause 6.5.
Wearing course, 35mm compacted hot rolled asphalt to BS 594 part 1: table 3: column 9. Design 30/14 with 20mm nominal size coated chippings.

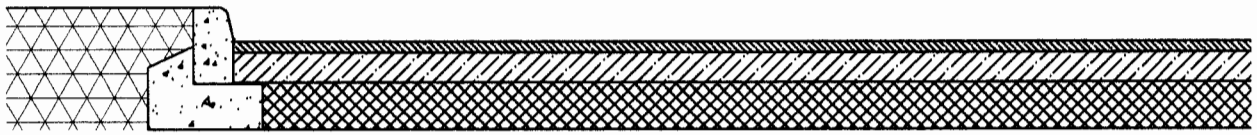

250mm x 125mm precast concrete half battered kerb on 150mm thick concrete bed and backing.

VEHICLE PARKING

ROAD

TYPICAL HARD SURFACING DETAILS

	SCALE	DRAWN	CHECKED	DATE		
	1:25				Typical hard surfacing details	4
	492-494 Claremont Road, Rusholme, M14 5WA					

PLANNING AND
BUILDING CONTROL
22 AUG 2013

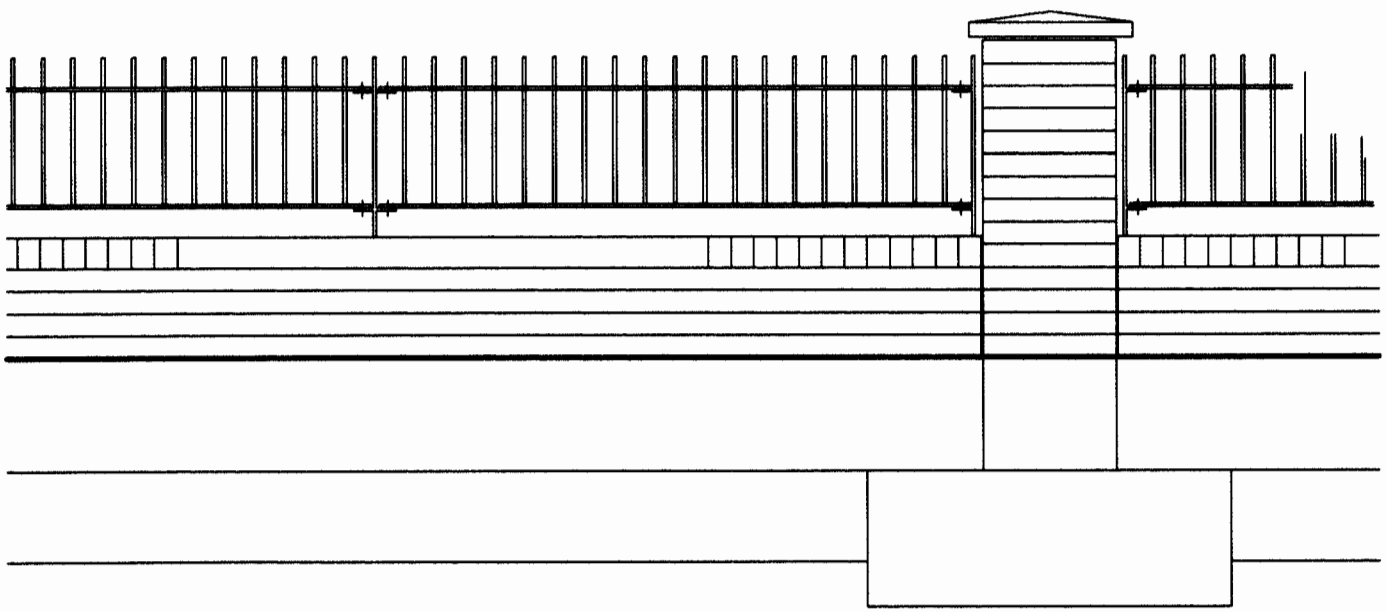

All welded panels 2 No between piers approx 2m long consisting of 12mm diameter solid mild steel vertical bars and 40x10mm solid mild steel horizontal members. 1700mm long Vertical bars to be spaced at 100mm max centres.

40x10mm solid mild steel posts with welded lugs to take panels and to fix to piers and welded base plates.

40x10mm solid mild steel inclined stays bolted to the posts as necessary. Ends set in 300x300x300mm 1:6 concrete.

40x10mm solid mild steel base supports as necessary.

All metal work to be galvanised after manufacture and paint finished.

SCALE	DRAWN	CHECKED	DATE	Boundary Wall Details, Sheet 1	5
1:50					
492-494 Claremont Road, Rusholme, M14 5WA					

PLANNING AND
BUILDING CONTROL
22 AUG 2013

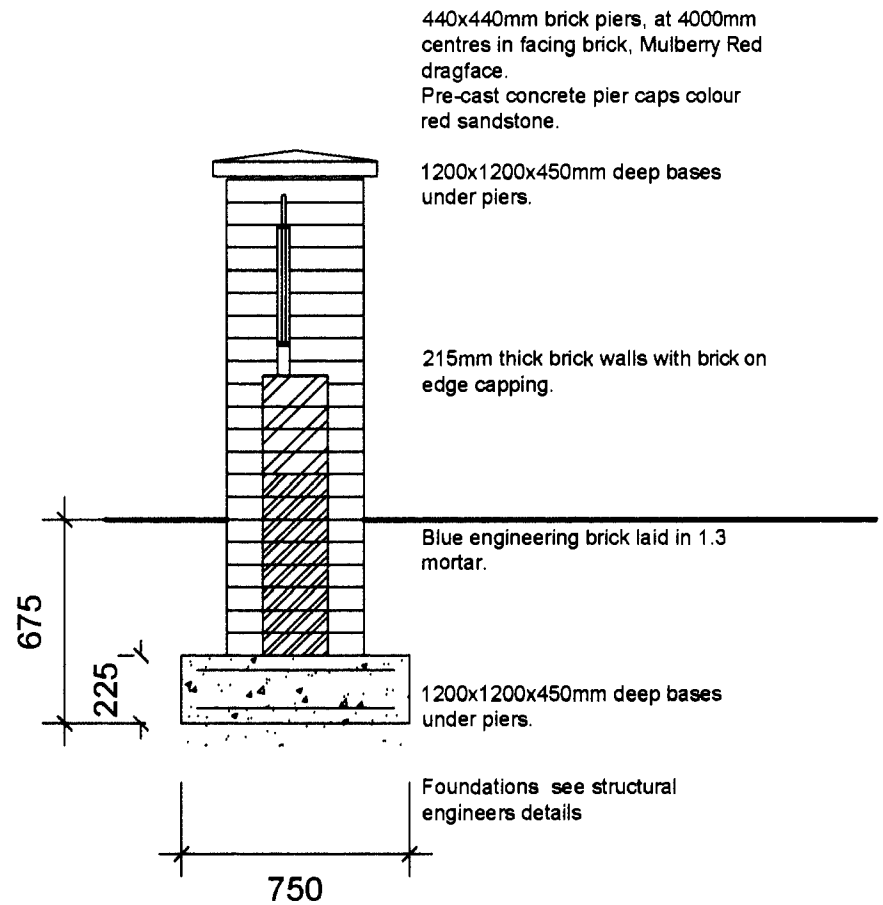

SCALE	DRAWN	CHECKED	DATE	Boundary Wall Details, Sheet 2	6
1:50					
492-494 Claremont Road, Rusholme, M14 5WA					

PLANNING AND BUILDING CONTROL
22 AUG 2013

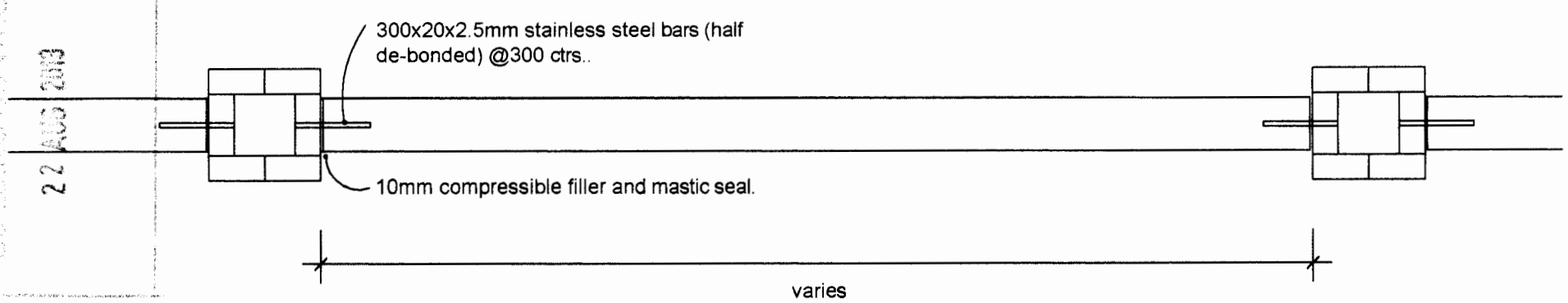

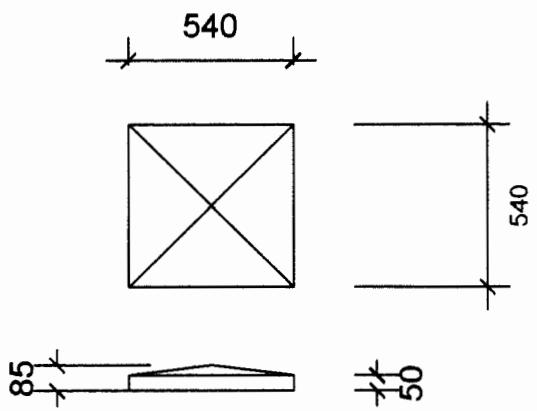

Pre cast concrete caps to piers

SCALE	DRAWN	CHECKED	DATE	Boundary Wall Details, Sheet 3	7
1:25					

492-494 Claremont Road, Rusholme, M14 5WA