C/V

Lounge

Hall

Up

Cup'd

Svp

Tg

Lounge

Kitchen

A

3658

Lounge Extension

Kitchen Extension

New Tg

A

175

5783mm approx.

Rear garden.

New Tg

Boundary fence.

Existing Detatched brick games room.

Boundary fence

Boundary fence

Assumed line of existing drains.

Take down existing rear walls & window (dotted) & make good all surfaces to match existing.

New Steels, pillars & concrete padstones to be designed by a structural engineer.

Resite existing gulley.

Take down existing rear Kitchen shown dotted.

100x50mm timber studding at 400mm ccs, 12.5mm P'bd & skim both sides, 100mm quilt insulation incorporated.

New Roddable T.g.s & new 100mm Sge's to connect to existing drains.

Detatched brick games room position.

RECD 18 APR 2008

PROPOSED GROUND FLOOR PLAN

DRAWING No 3 OF 5 DRAWING'S

PROPOSED REAR GROUND FLOOR KITCHEN & LOUNGE EXTENSION AT–
No 81 GREENHILL ROAD,
CRUMPSALL,
MANCHESTER.
FOR–MR ALLAH RAKHA.
TEL–07899856370.

SCALE:– 1:50 DATE:– NOV 07

kevin foey
BUILDING DESIGN CONSULTANTS
8 GLASSON WALK,
CHADDERTON,
OLDHAM, OL9 9DR.
TEL– 01457 879 692
TEL– 0798 676 1559

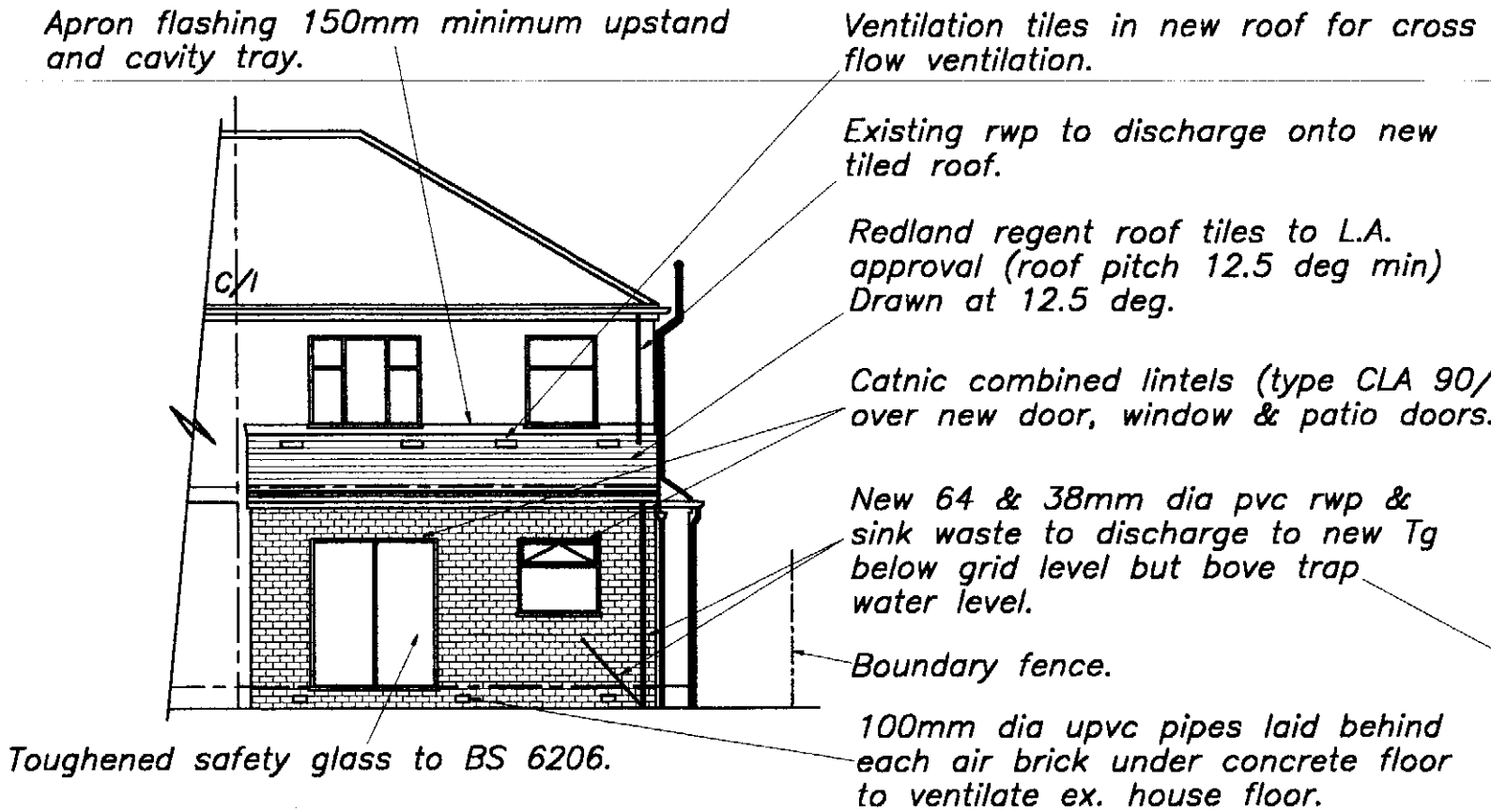

PROPOSED REAR ELEVATION

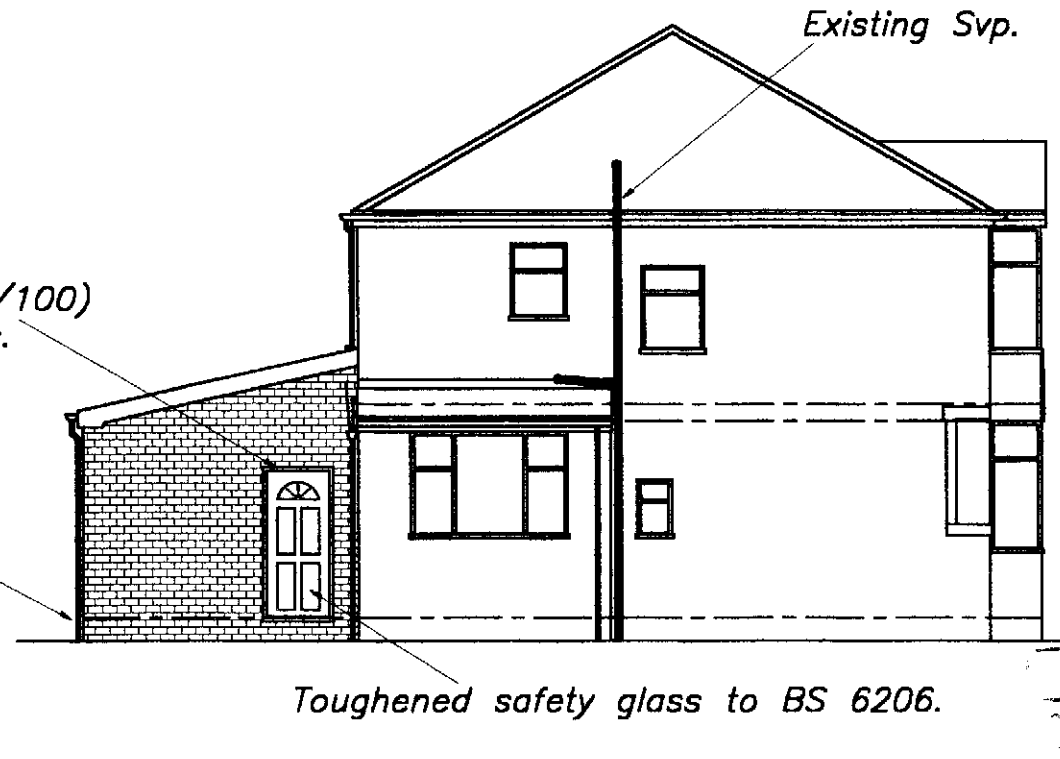

PROPOSED SIDE ELEVATION

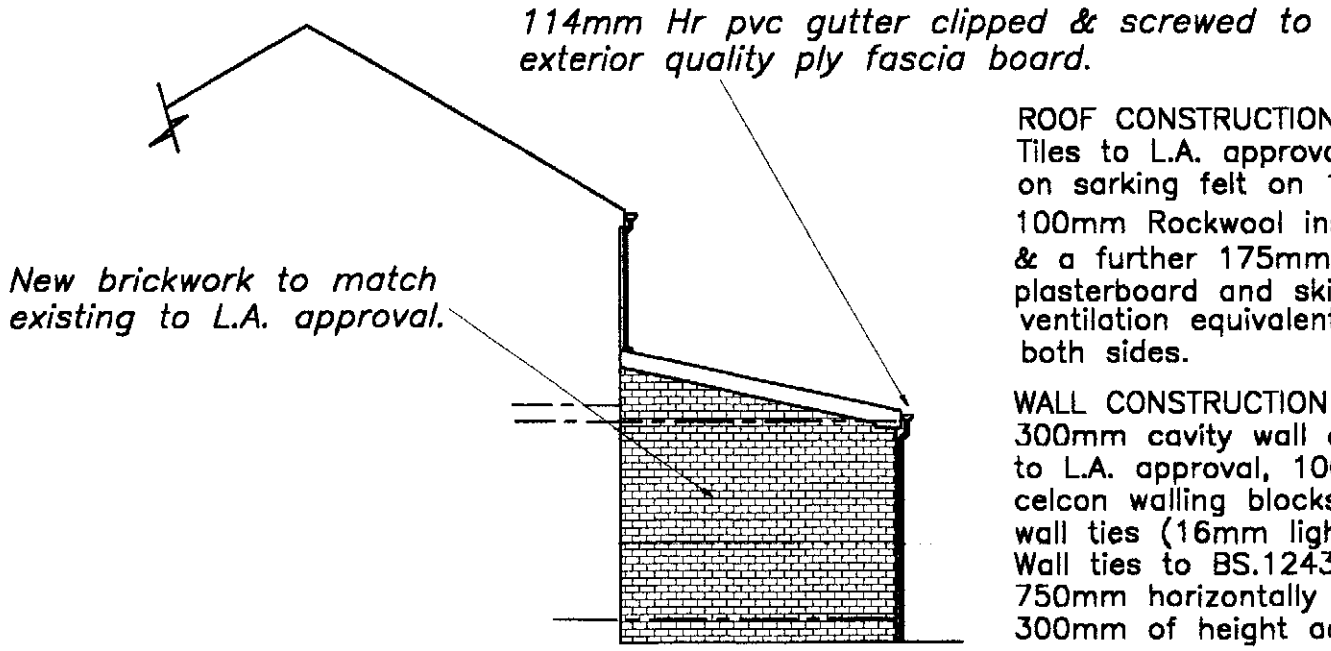

PROPOSED SIDE ELEVATION

ROOF CONSTRUCTION
Tiles to L.A. approval on 25 x 50 mm sw timber battens on sarking felt on 150 x 50mm rafters & 175 x 50mm ceiling joists@400mm ccs
100mm Rockwool insulation between ceiling joists & a further 175mm over ceiling joists, u/s to be finished with 13mm plasterboard and skim. Roof to be provided with eaves ventilation equivalent to a 25mm continuous strip both sides.

WALL CONSTRUCTION
300mm cavity wall comprising 100mm facing bricks to L.A. approval, 100mm cavity(DRYTHERM FILLED) 100mm celcon walling blocks with stainless steel wall ties (16mm lightweight plaster) (brickwork only below dpc). Wall ties to BS.1243 : 1972 (1981 amended) placed at 750mm horizontally and 450mm vertically and every 300mm of height adjacent to openings.U value=0.3

GROUND FLOOR CONSTRUCTION U Value=0.22
100mm concrete slab on vapour control layer1200g visquene laid directly over 80mm kingspan thermafloor TF70 on sandblinded well consolidated hardcore.
insulated upstand=insulation thickness+thickness of slab.

PLANNING
18 APR 2008

DRAWING No 4 OF 5 DRAWING'S

PROPOSED REAR GROUND FLOOR KITCHEN & LOUNGE EXTENSION AT–
No 81 GREENHILL ROAD,
CRUMPSALL,
MANCHESTER.
FOR–MR ALLAH RAKHA.
TEL–07899856370.

SCALE:– 1:100 DATE:– NOV 07

kevin foey
BUILDING DESIGN CONSULTANTS
8 GLASSON WALK,
CHADDERTON,
OLDHAM, OL9 9DR.
TEL– 01457 879 692
TEL– 0798 676 1559

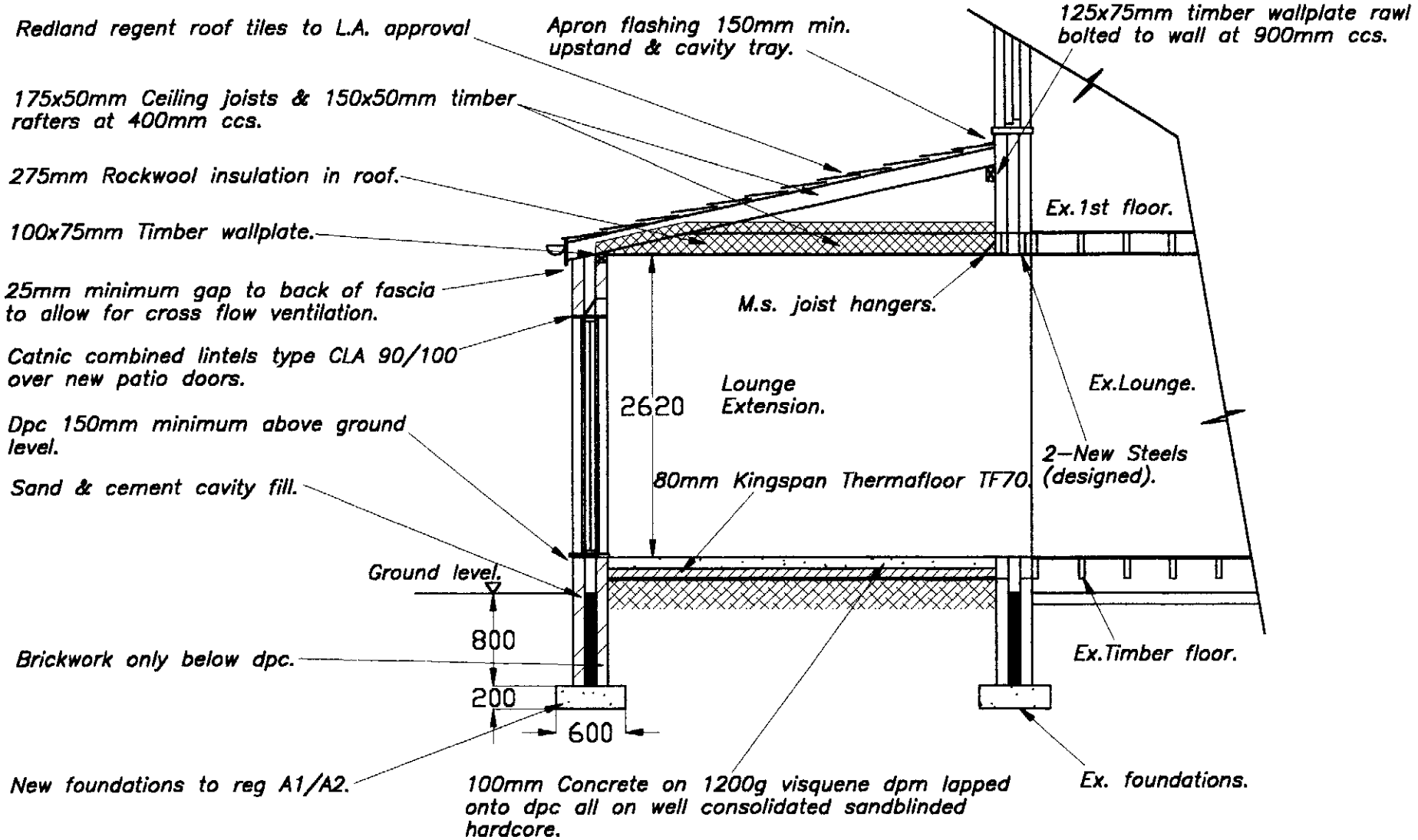

SECTION A-A

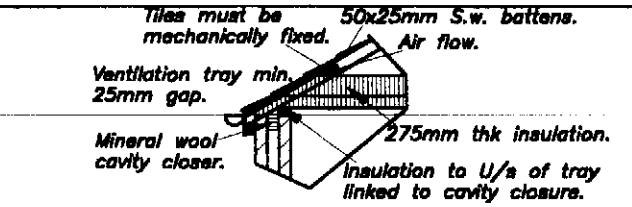

EAVES DETAIL

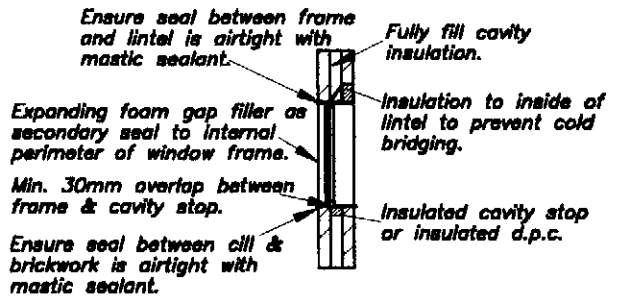

WINDOW HEAD & CILL DETAIL

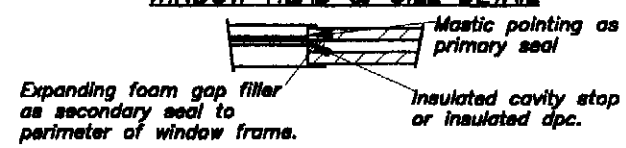

WINDOW JAMB DETAIL

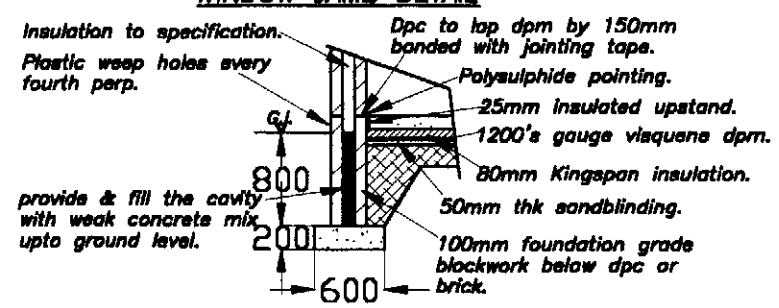

FOUNDATION DETAIL

DRAWING No 5 OF 5 DRAWING'S

PROPOSED REAR GROUND FLOOR KITCHEN & LOUNGE EXTENSION AT-
No 81 GREENHILL ROAD,
CRUMPSALL,
MANCHESTER,
FOR-MR ALLAH RAKHA.
TEL-07899856370.

18 APR 2008

SCALE:- 1:50 DATE:- NOV 07

kevin foey
BUILDING
DESIGN CONSULTANTS

8 GLASSON WALK,
CHADDERTON,
OLDHAM, OL9 9DR.
TEL- 01457 879 892
TEL- 0798 676 1559