Bitmac Pathway Construction Over Existing Footpath Sub-base Section

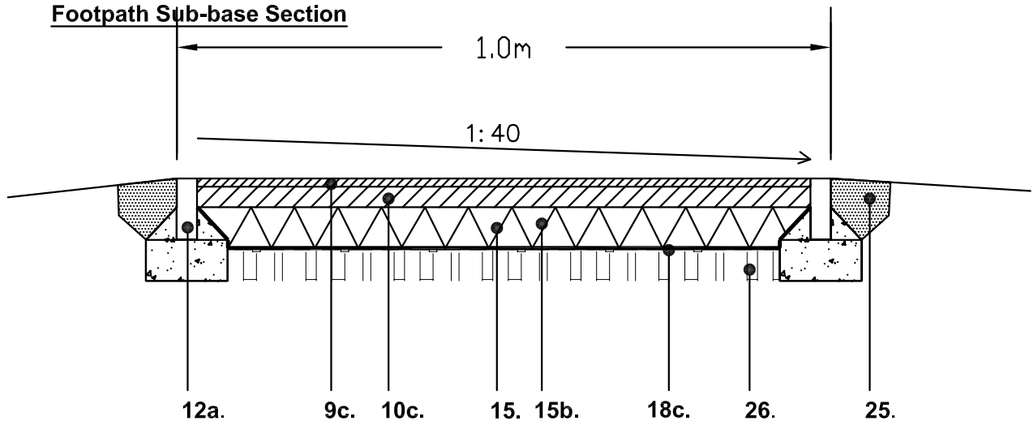

PCC Flag Paving Construction Over Existing Footpath Sub-base Section

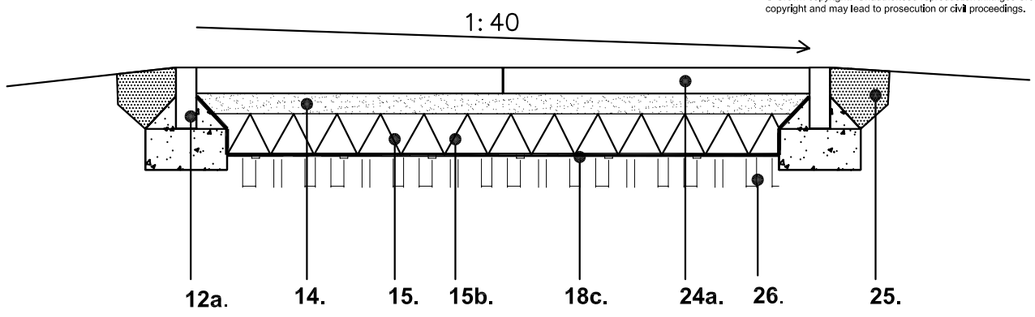

Notes
1) Figured dimensions to be taken. Do not scale dimensions. Contractors must verify all dimensions on site before preparing shop drawings or commencing any work.
2) Copyright © This drawing must not be reproduced without the permission of The Groundwork Trust
3) Reproduced from Ordnance Survey mapping with permission of the controller of HMSO.

© Crown copyright. Unauthorised reproduction infringes Crown copyright and may lead to prosecution or civil proceedings.

Bitmac Pathway Construction Section

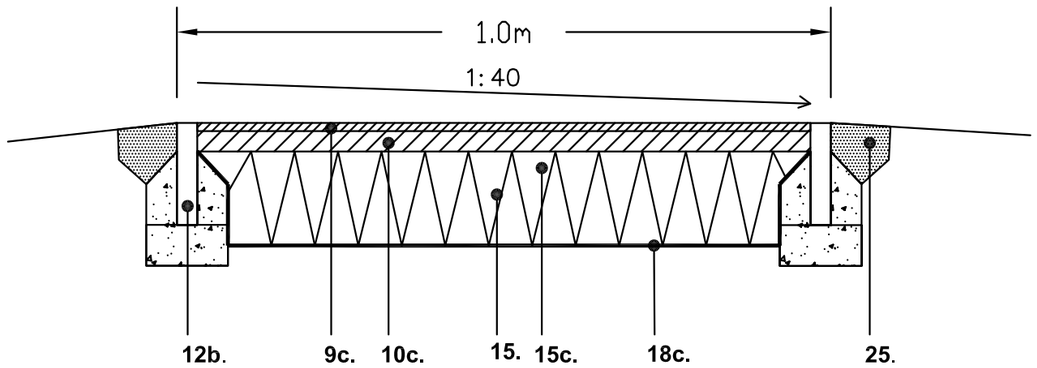

PCC Flag Paving Construction Section

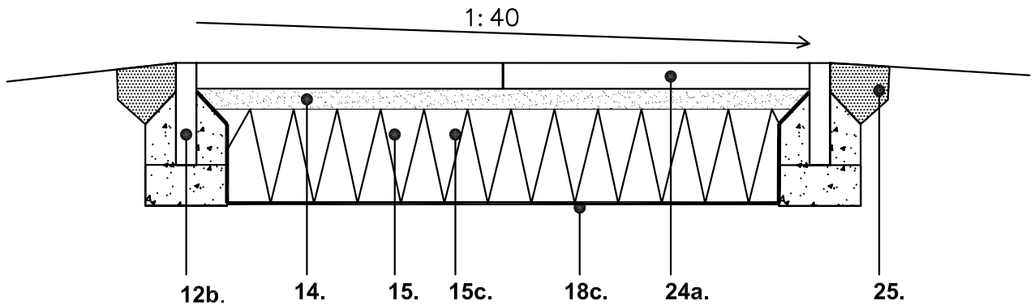

Notes:

9c. AC 6 close surface course with 100 / 150 binder to PD 6691 Annex B 25mm thickness.

10c. AC 20 dense binder course with 40 / 60 grade binder to PD 6691 Annex C, 50mm thickness.

12a. 150 x 50mm PCC edging kerb with 150mm GEN / ST2 bed and haunch to restrain tarmac.

12b. 250 x 50mm PCC edging kerb with 150mm GEN / ST2 bed and haunch to restrain tarmac.

14. Bedding layer - 50mm 6.3-2mm bedding grit.

15. Semidry concrete rolled and compacted by 6t deadweight roller or vibrating roller equivalent:

15b. depth 100mm

15c. depth 230mm.

18c. Terram 1000 Geotextile.

24a. 600 x 900 x 63mm PCC flag paving units, close butt laid with 2/ 3mm dry joints.

25. Reinstate and consolidate suitable clean topsoil 15mm settled depth above path edges and grass seed following completion. Ensure no trip is formed at edges.

26. Remains of existing sub-base

In areas that have Mare's tail the formation level or/and existing remaining sub-base(s) are to be treated with the residual herbicide 'Paradise' a non-selective residual broad spectrum herbicide.

Supplier: Sherriff Amenity - Cheshire Depot, Poplar Park, Cliff Lane, Lymm, Cheshire. WA13 0TD
Tel: 01925 758886


Bitmac Path with PCC Edging Kerbs


PCC Flag Paving

Revisions Notes:

Rev	Date	Notes
B	03-12-10	Bitmac sub base amended
C	17-12-10	Adjusted drawing number
D	31-08-12	Improved specification for prevention of Mare's tail

Southway Housing Trust

GROUNDWORK

CHANGING PLACES CHANGING LIVES

Project: Southway Housing Trust Driveway Improvements

Drawing Title: PCC Flag & Bitmac Pedestrian Surfacing

SCALE	DATE	DRAWING NO.	REV	DRAWN BY	CHECKED BY
1:25 @ A3	26.11.10	1612-023	D	AP	PH

Groundwork in Manchester, Salford, Stockport, Tameside & Trafford.
Timber Wharf, 42-50 Worsley Street, Castlefields Manchester, M15 4LD Tel:0161 220 1000