This drawing is the property of Technical Signs and must not be reproduced in part or in full without prior consent of Technical Signs.



Front elevation & aerial view with windbreaks in place
Scale 1:100

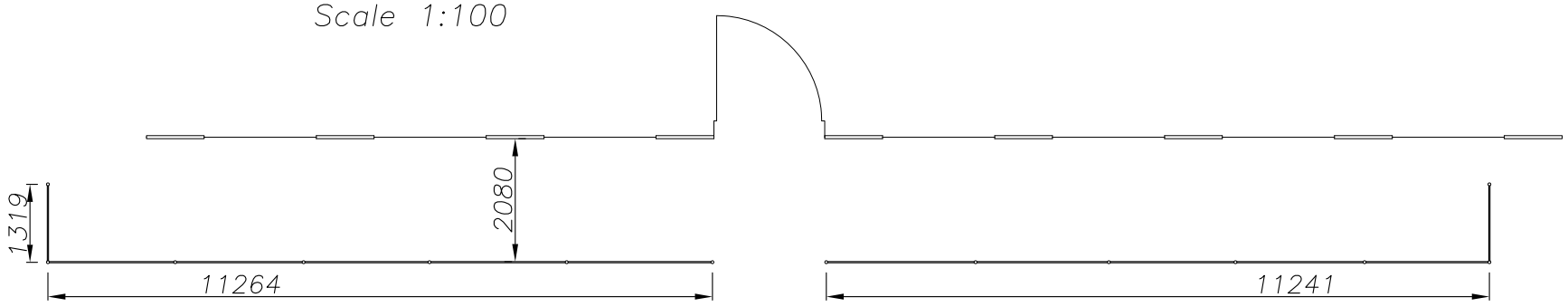

Proposed

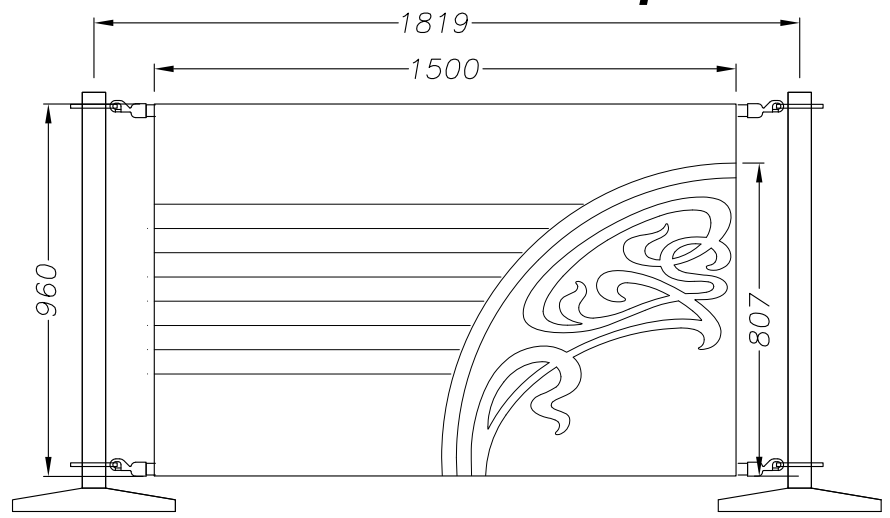

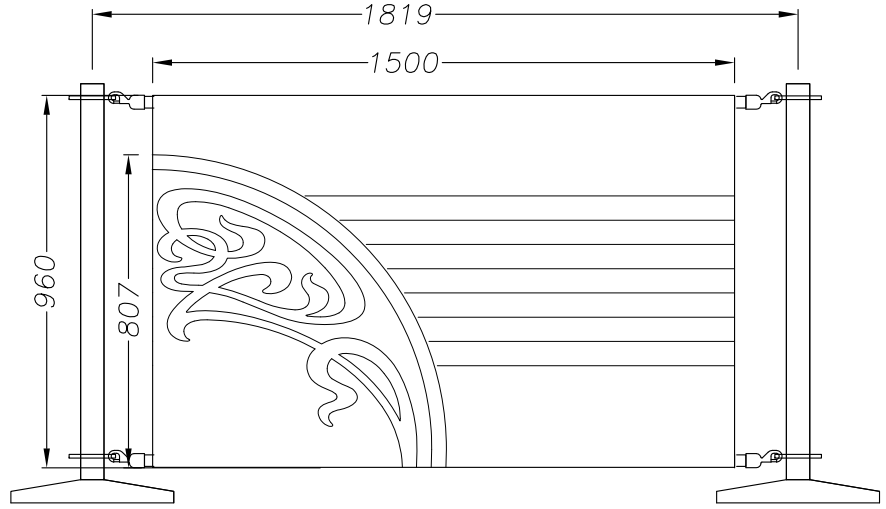

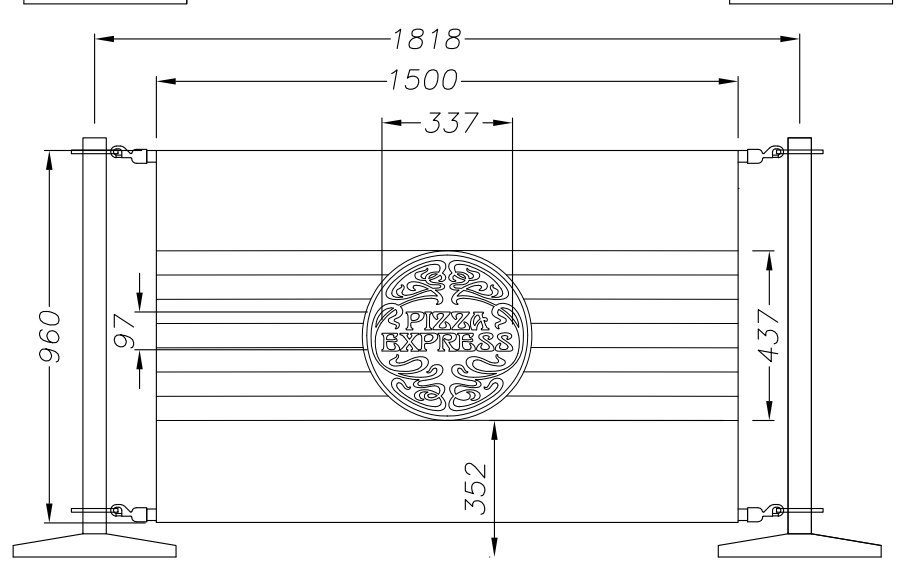

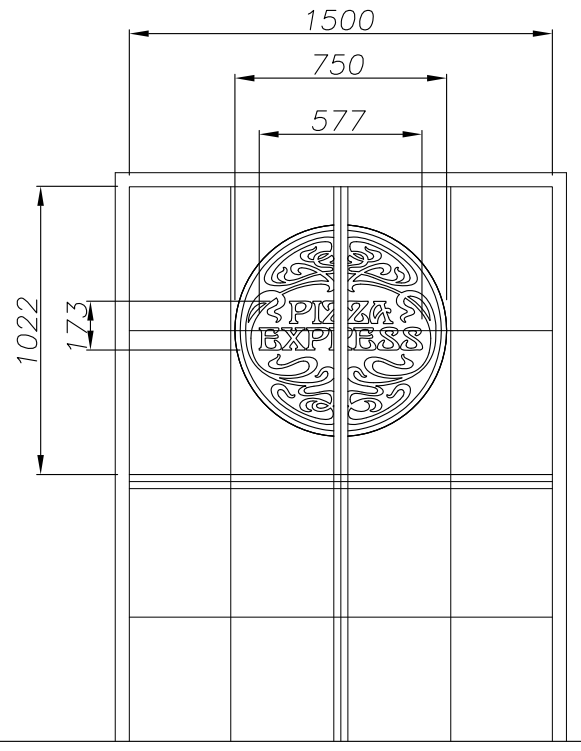

Blinds - 7 off
Scale 1:20
Retractable black cotton blinds.
Three blinds with logos printed in white.
Fitted behind the glazing.
No illumination.

Windbreaks - 12 off
Scale: 1:20
Windbreaks with chrome posts and stainless steel cables.
Black canvas windbreaks having printed white stripes and printed white logos.
Non illuminated.

Technical Signs
Floor 1 - Unit 3
Hille Business Centre
132 St Albans Road
Watford, Herts, WD2 4AE
Tel: 01923 811999
Fax: 01923 811998
E-mail: info@technicalsigns.co.uk

Client	Pizza Express
Address/Job details	95 Lapwing Lane West Didsbury Lancashire Town County Planning
Job No	
Drawn by	JGB
Date	08/22/13
Scale	As specified (A3)
Drawing No	382495-4
Rev	