Notes
1) Figured dimensions to be taken. Do not scale dimensions. Contractors must verify all dimensions on site before preparing shop drawings or commencing any work.
2) Copyright © This drawing must not be reproduced without the permission of The Groundwork Trust
3) Reproduced from Ordnance Survey mapping with permission of the controller of HMSO.

© Crown copyright. Unauthorised reproduction infringes Crown copyright and may lead to prosecution or civil proceedings.

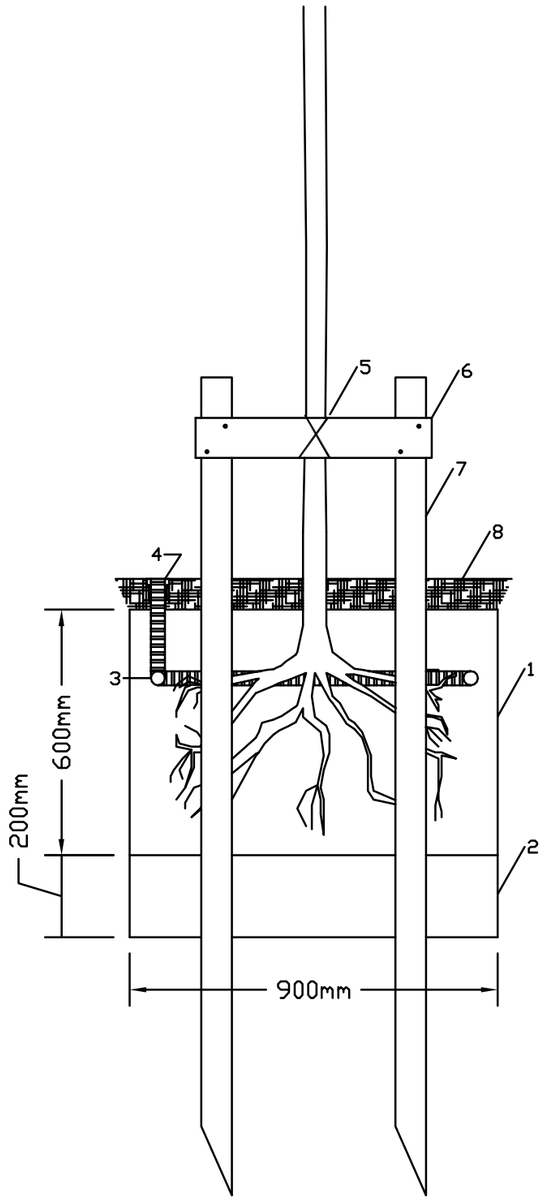

1 Backfill planting pit with 50% by volume approved excavated or imported topsoil mixed with approved tree planting compost; compacting in 200mm layers
2 Bottom of tree pit to be forked over to improve drainage
3 Root Rain Metro (RRPC3) or similar approved installed.
4 Plastic inlet cap to be flush or slightly proud of the finished surface levels
5 Tree to be tied to crossbeam with 'Greenleaf' rubber spacer and tie (spacer between crossbeam and trunk so as to prevent chafing) or similar approved).
6 25x100mm treated timber crossbeam securely nailed to stakes approx. 400mm above ground level
7 2no. 1500mm long peeled larch stakes min. 75mm dia. free from projections. Treated with 'tanalith' (to BS 1282) or similar approved and set approx. 400mm apart
8 Melcourt 'Amenity Bark' or similar approved mulch 50mm thick

Tree Pit Detail Selected Standard Section

Southway Housing Trust

Revisions Notes:

Rev	Date	Notes
A	17-12-10	Adjusted drawing number

GROUNDWORK

CHANGING PLACES CHANGING LIVES

Project	Drawing Title
Southway Housing Trust Driveway Improvements	Selected Standard Tree Pit Detail

SCALE	DATE	DRAWING NO.	REV	DRAWN BY	CHECKED BY
1:15 @ A3	01.12.10	1612-072	A	AP	PH

Groundwork in Manchester, Salford, Stockport, Tameside & Trafford.
Timber Wharf, 42-50 Worsley Street, Castlefields Manchester, M15 4LD Tel: 0161 220 1000