103402

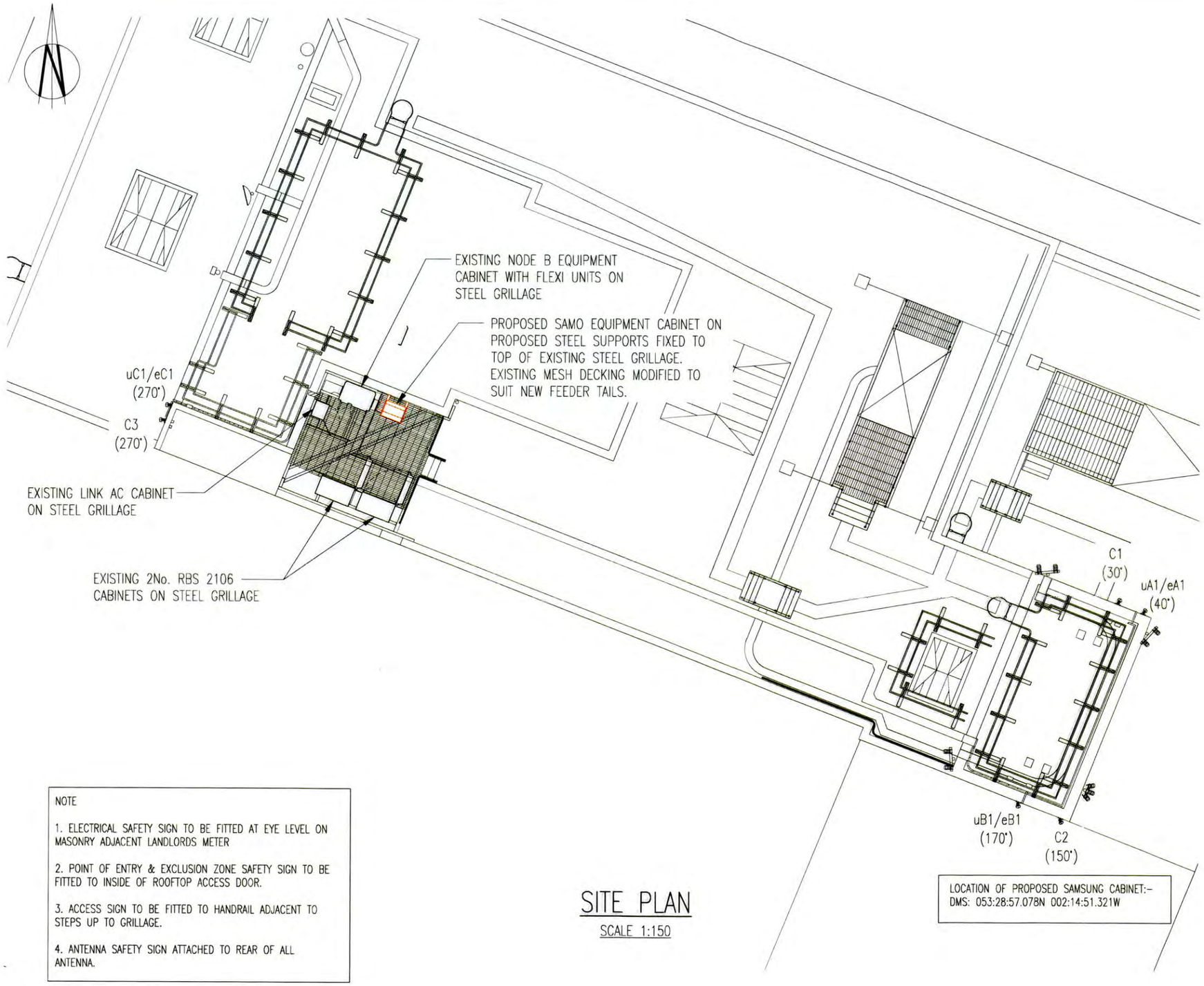

NOTE

1. ELECTRICAL SAFETY SIGN TO BE FITTED AT EYE LEVEL ON MASONRY ADJACENT LANDLORDS METER

2. POINT OF ENTRY & EXCLUSION ZONE SAFETY SIGN TO BE FITTED TO INSIDE OF ROOFTOP ACCESS DOOR.

3. ACCESS SIGN TO BE FITTED TO HANDRAIL ADJACENT TO STEPS UP TO GRILLAGE.

4. ANTENNA SAFETY SIGN ATTACHED TO REAR OF ALL ANTENNA.

SITE PLAN

SCALE 1:150

LOCATION OF PROPOSED SAMSUNG CABINET:-
DMS: 053:28:57.078N 002:14:51.321W

100mm
50mm
10mm

A3

PLANNING AND BUILDING CONTROL
19 AUG 2013

No.	Revision	Date	By	ckd
A1	PRELIMINARY ISSUE FOR COMMENT	30/04/13	I.P.	REM

MBNL

6 Anglo Office Park
67 White Lion Road
Amersham
HP7 9FB
Tel: 01494 762 923
Email: info@mbnl.co.uk

WHP Wilkinson Helsby
Connaught House, Park View,
Lofthouse Gate, Wakefield
WF3 3HA
Tel: 01924 876777 Fax: 01924 876778
e-mail: info@wilkinson-helsby.co.uk

Site Name & Address:
INTERNATIONAL HOUSE
82-86 DEANSGATE
MANCHESTER, M3 2ER

Title:
PROPOSED TELECOMMUNICATIONS ROOFTOP UPGRADE SITE LAYOUT

Purpose of Issue:
APPROVAL

Drawing No:
56017 - 02

Cell No:	Site No:
56017	919661

Issue:	Scale:		Ch'd:	Date:
A1	AS STATED		REM	30.04.13
	Drn: I.P.	Date: 19.04.13	App: MSH	Date: 30.04.13

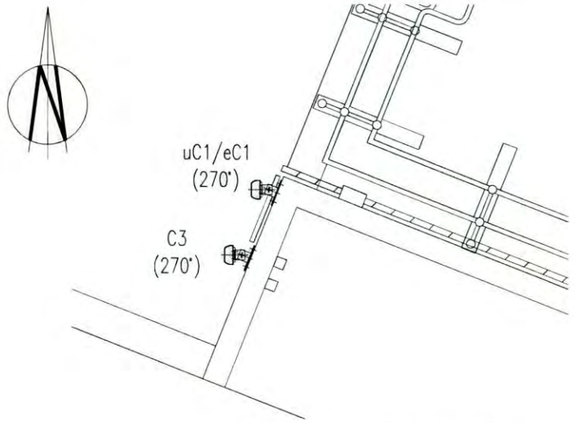

6 No. EXISTING GSM AND UMTS ANTENNA AND GSM LNA's TO BE RETAINED

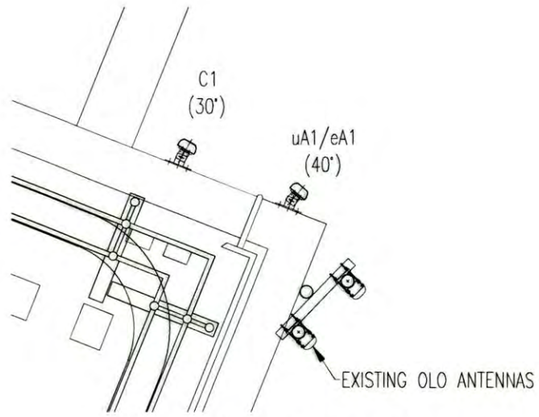

ANTENNA DETAILS

SCALE 1:50

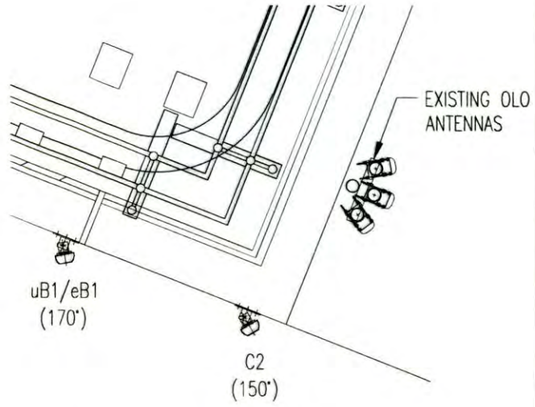

EXISTING UMTS LNA's TO BE REPLACED WITH WIDEBAND LNA's

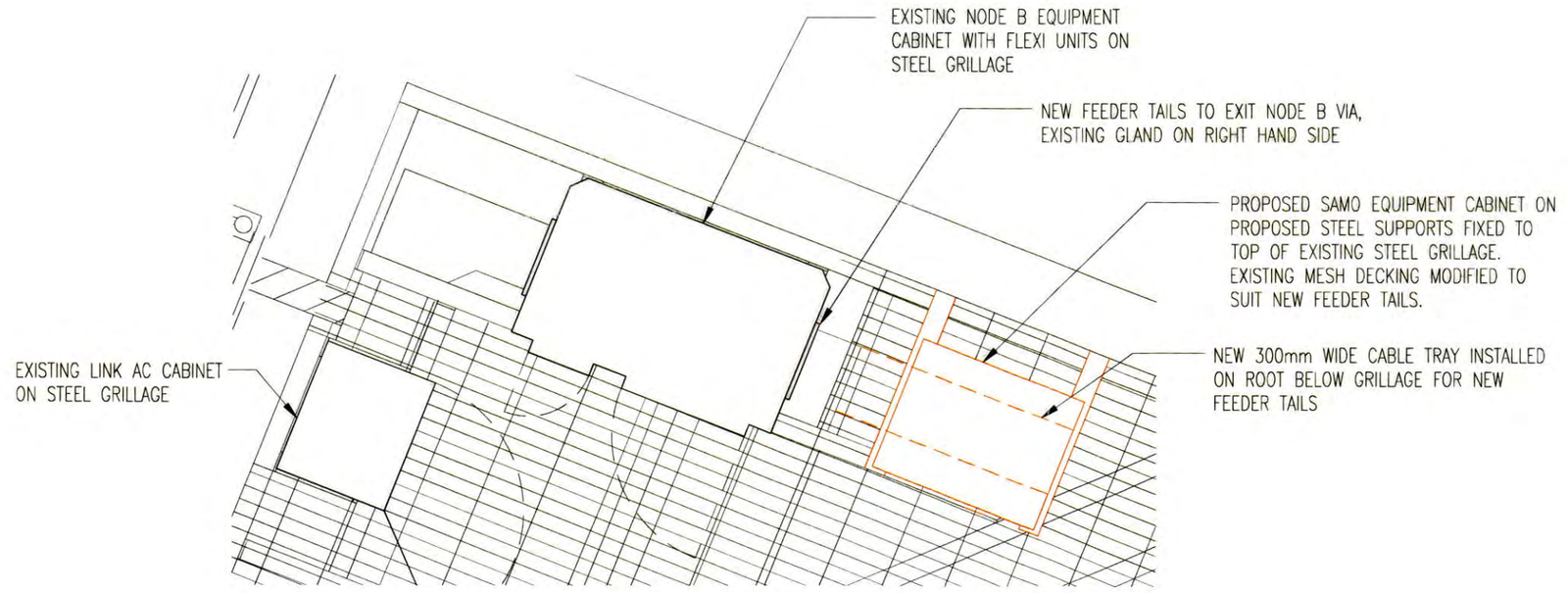

EQUIPMENT LAYOUT

SCALE 1:25

NOTE. PROPOSED SAMSUNG CABINET TO BE INSTALLED STRICTLY IN ACCORDANCE WITH MANUFACTURERS DETAILS. REFER TO DESIGN GUIDE FOR ELECTRICAL, EARTHING, TRANSMISSION, ALARM DETAILS, ETC.

100mm
50mm
10mm

A3

PLANNING AND BUILDING CONTROL
19 APR 2013

No.	Revision	Date	By	ckd
A1	PRELIMINARY ISSUE FOR COMMENT	30/04/13	I.P.	REM

MBNL
6 Anglo Office Park
67 White Lion Road
Amersham
HP7 9FB
Tel: 01494 762 923
Email: info@mbnl.co.uk

WHP Wilkinson Helsby
Connaught House, Park View,
Lofthouse Gate, Wakefield
WF3 3HA
Tel: 01924 876777 Fax: 01924 876778
e-mail: info@wilkinson-helsby.co.uk

Site Name & Address:
INTERNATIONAL HOUSE
82–86 DEANSGATE
MANCHESTER, M3 2ER

Title:
PROPOSED TELECOMMUNICATIONS
ROOFTOP UPGRADE
EQUIPMENT LAYOUT

Purpose of Issue:
APPROVAL

Drawing No:
56017 – 03

Cell No: 56017
Site No: 919661

Issue:	Scale:	Drn:	Date:	Ch'd:	Date:	App:	Date:
A1	AS STATED	I.P.	19.04.13	REM	30.04.13	MSH	30.04.13

EXISTING UMTS LNA's TO BE REPLACED WITH WIDEBAND LNA's

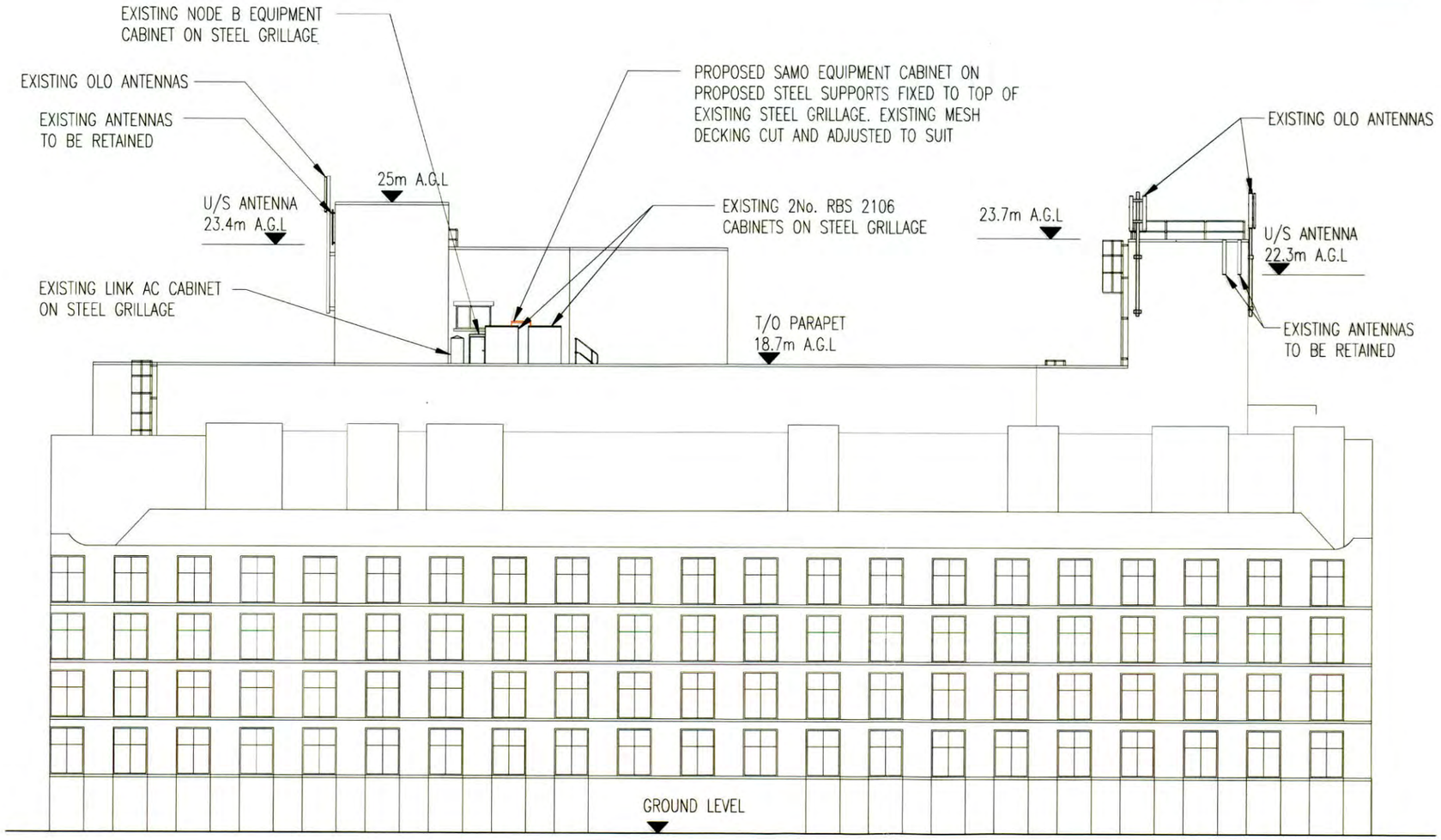

SOUTH WEST ELEVATION

SCALE 1:200

100mm
50mm
10mm

A3

PLANNING AND BUILDING CONTROL
19 AUG 2013

No.	Revision	Date	By	ckd
A1	PRELIMINARY ISSUE FOR COMMENT	30/04/13	I.P.	REM

MBNL

6 Anglo Office Park
67 White Lion Road
Amersham
HP7 9FB
Tel: 01494 762 923
Email: info@mbnl.co.uk

WHP Wilkinson Helsby
Connaught House, Park View,
Lofthouse Gate, Wakefield
WF3 3HA
Tel: 01924 876777 Fax: 01924 876778
e-mail: info@wilkinson-helsby.co.uk

Site Name & Address:
INTERNATIONAL HOUSE
82-86 DEANSGATE
MANCHESTER, M3 2ER

Title:
PROPOSED TELECOMMUNICATIONS
ROOFTOP UPGRADE
SITE ELEVATION

Purpose of Issue:
APPROVAL

Drawing No:
56017 - 04

Cell No: 56017
Site No: 919661

Issue:	Scale:	Drn:	Date:	Ch'd:	Date:	App:	Date:
A1	AS STATED	I.P.	19.04.13	REM	30.04.13	MSH	30.04.13

ANTENNA DETAILS

EXISTING	ORIENT	BASE ANT. HEIGHT (m) AGL	ANTENNA TYPE	RET	OVERALL FEEDER LENGTH	ANTENNA JUMPER LENGTH	OVERALL SYSTEM LOSS	MAIN FEEDER TYPE	TMA
C1	30	22.3	POWERWAVE 7721	No	EX	0.5	EX	5-50	EX
C2	150	22.3	POWERWAVE 7721	No	EX	0.5	EX	5-50	EX
C3	270	23.4	POWERWAVE 7721	No	EX	0.5	EX	5-50	EX
uA1	40	22.3	KAT 742212	No	EX	0.5	EX	5-50	EX
uB1	170	22.3	KAT 742212	No	EX	0.5	EX	5-50	EX
uC1	270	23.4	KAT 742212	No	EX	0.5	EX	5-50	EX

EXISTING ANTENNA TABLE

ANTENNA DETAILS

PROPOSED	ORIENT	BASE ANT. HEIGHT (m) AGL	ANTENNA TYPE	RET REQ'D	OVERALL FEEDER LENGTH	ANTENNA JUMPER LENGTH	OVERALL SYSTEM LOSS	MAIN FEEDER TYPE	TMA REQ'D
C1	30	22.3	POWERWAVE 7721	No	EX	0.5	EX	5-50	EX
C2	150	22.3	POWERWAVE 7721	No	EX	0.5	EX	5-50	EX
C3	270	23.4	POWERWAVE 7721	No	EX	0.5	EX	5-50	EX
uA1/eA1	40	22.3	KAT 742212	No	45	0.5	2.34	7-50	RD0448
uB1/eB1	170	22.3	KAT 742212	No	39	0.5	2.09	7-50	RD0448
uC1/eC1	270	23.4	KAT 742212	No	11	0.5	0.90	5-50	RD0448

NOTE: FEEDER LENGTH SHOWN IS ONLY APPROXIMATE AND SHOULD BE CHECKED BY RIGGING CONTRACTOR PRIOR TO WORK COMMENCING

PROPOSED ANTENNA TABLE

PLANNING AND BUILDING CONTROL
19 AUG 2013

No.	Revision	Date	By	ckd
A1	PRELIMINARY ISSUE FOR COMMENT	30/04/13	I.P.	REM

MBNL
6 Anglo Office Park
67 White Lion Road
Amersham
HP7 9FB
Tel: 01494 762 923
Email: info@mbnl.co.uk

WHP Wilkinson Helsby
Connaught House, Park View,
Lofthouse Gate, Wakefield
WF3 3HA
Tel: 01924 876777 Fax: 01924 876778
e-mail: info@wilkinson-helsby.co.uk

Site Name & Address:
INTERNATIONAL HOUSE
82-86 DEANSGATE
MANCHESTER, M3 2ER

Title:
PROPOSED TELECOMMUNICATIONS
ROOFTOP UPGRADE
ANTENNA DETAILS

Purpose of Issue:
APPROVAL

Drawing No:
56017 - 05

Cell No:	Site No:
56017	919661

Issue:	Scale:		Ch'd:	Date:
A1	AS STATED		REM	30.04.13
	Drn: I.P.	Date: 19.04.13	App: MSH	Date: 30.04.13

100mm
50mm
10mm
A3

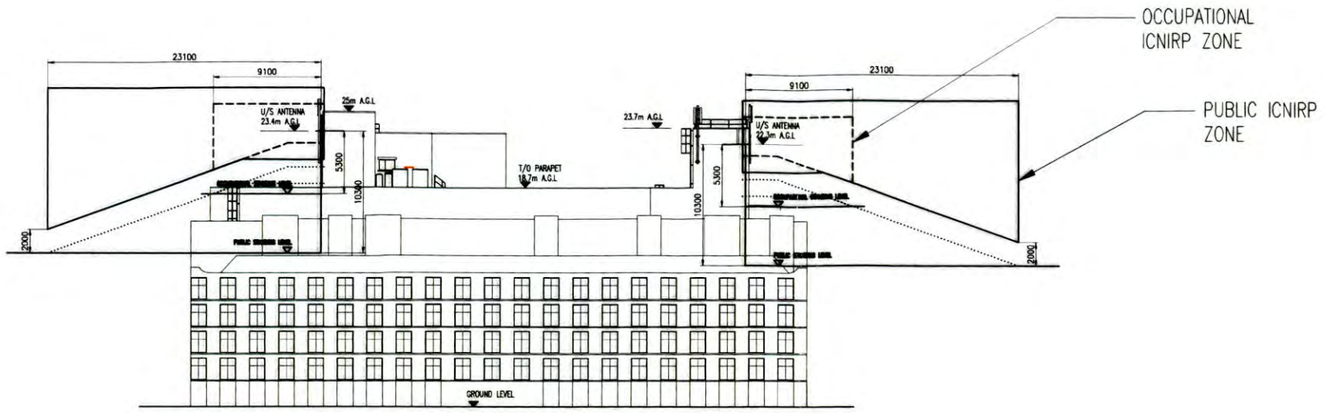

ELEVATION

SCALE 1:500

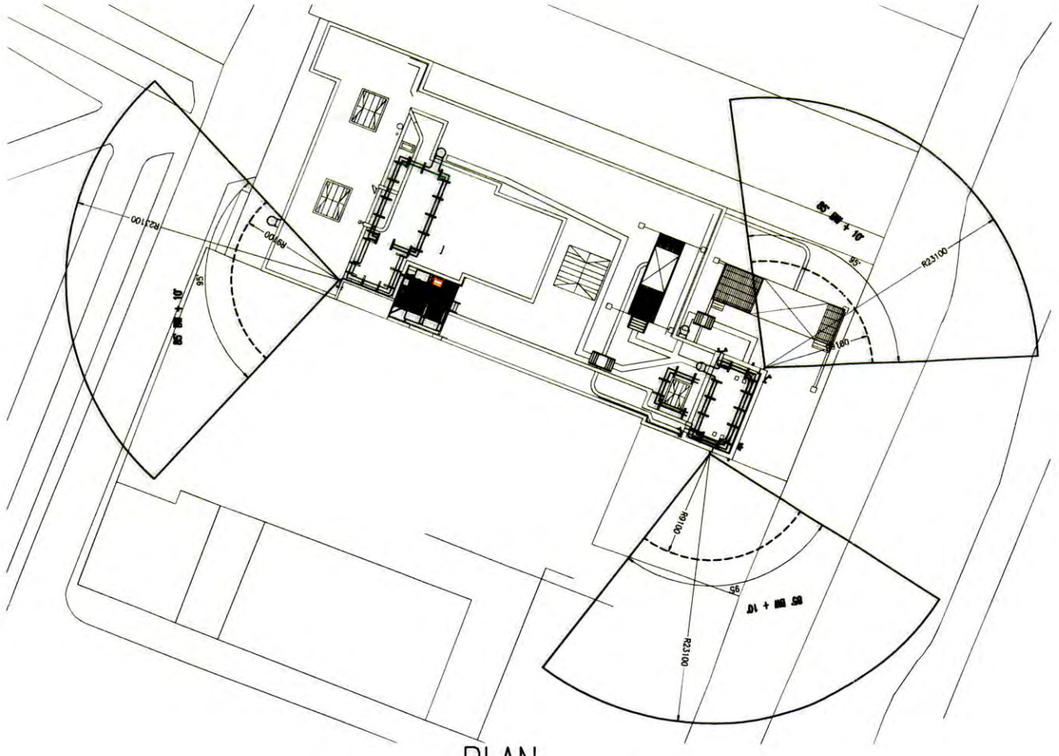

PLAN

SCALE 1:500

ICNIRP EXCLUSION ZONES ARE BASED ON VALUES WITHIN THE MBNL ICNIRP COMPLIANCE CERTIFICATION DOCUMENT GSDD008.

EXISTING SITE TYPE GF/RT (UMTS ONLY)
2No OTHER OPERATORS WITHIN 127m:
VODAFONE (SITE ID 9668) 60m AWAY.
O2 (SITE ID 4641) ON SAME ROOF.
USE VALUES FOR 5 OPERATORS (EE+2)
ACTUAL BUILD HEIGHT: 22.3m
FRONT DISTANCE PUBLIC: 23.1m
FRONT DISTANCE OCCUPATIONAL: 9.1m
PUBLIC BUILD HEIGHT 10.3m
COMPLIANCE DISTANCES BASED ON THE FOLLOWING
No. OF CARRIERS:
GSM – 12
UMTS – 7

BUILDING CONTROL
19 AUG 2013

No.	Revision	Date	By	ckd
A1	PRELIMINARY ISSUE FOR COMMENT	30/04/13	I.P.	REM

MBNL

6 Anglo Office Park
67 White Lion Road
Amersham
HP7 9FB
Tel: 01494 762 923
Email: info@mbnl.co.uk

WHP Wilkinson Helsby
Connaught House, Park View,
Lofthouse Gate, Wakefield
WF3 3HA
Tel: 01924 876777 Fax: 01924 876778
e-mail: info@wilkinson-helsby.co.uk

Site Name & Address:
INTERNATIONAL HOUSE
82–86 DEANSGATE
MANCHESTER, M3 2ER

Title:
PROPOSED TELECOMMUNICATIONS
ROOFTOP UPGRADE
ICNIRP DETAILS

Purpose of Issue:
APPROVAL

Drawing No:
56017 – 06

Cell No:	Site No:
56017	919661

Issue:	Scale:	Drn:	Date:	Ch'd:	Date:
A1	AS STATED	I.P.	19.04.13	REM	30.04.13
				App: MSH	Date: 30.04.13

100mm
50mm
10mm
A3

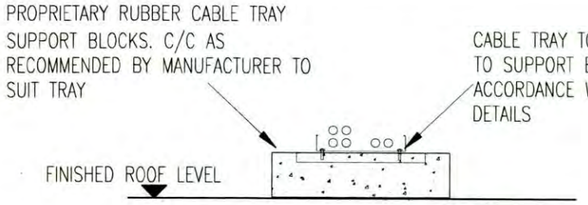

CABLE TRAY DETAILS

SCALE 1:20

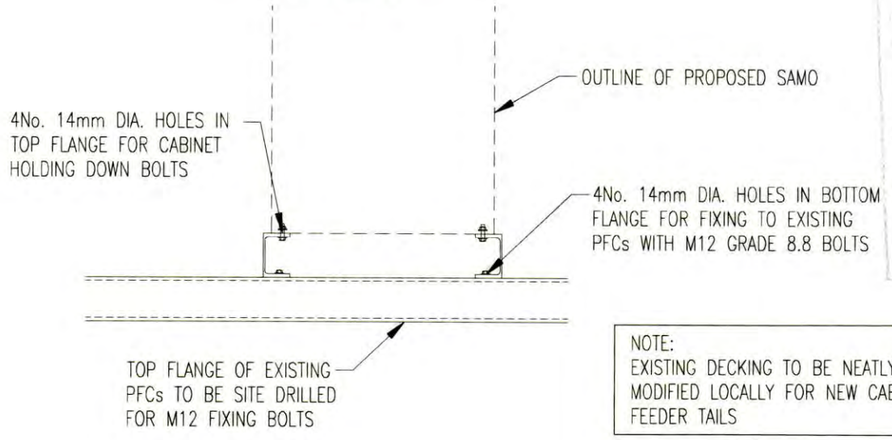

NOTE. ALL WORKS ARE TO BE CARRIED OUT STRICTLY IN ACCORDANCE WITH THE DESIGN GUIDE.

ANY DEVIATIONS FROM THE DETAILS ON THIS DRAWING OR THE DESIGN GUIDE MUST BE APPROVED BY WHP/CLIENT PRIOR TO COMMENCEMENT OF THE WORKS.

NOTE:
EXISTING DECKING TO BE NEATLY MODIFIED LOCALLY FOR NEW CABINET FEEDER TAILS

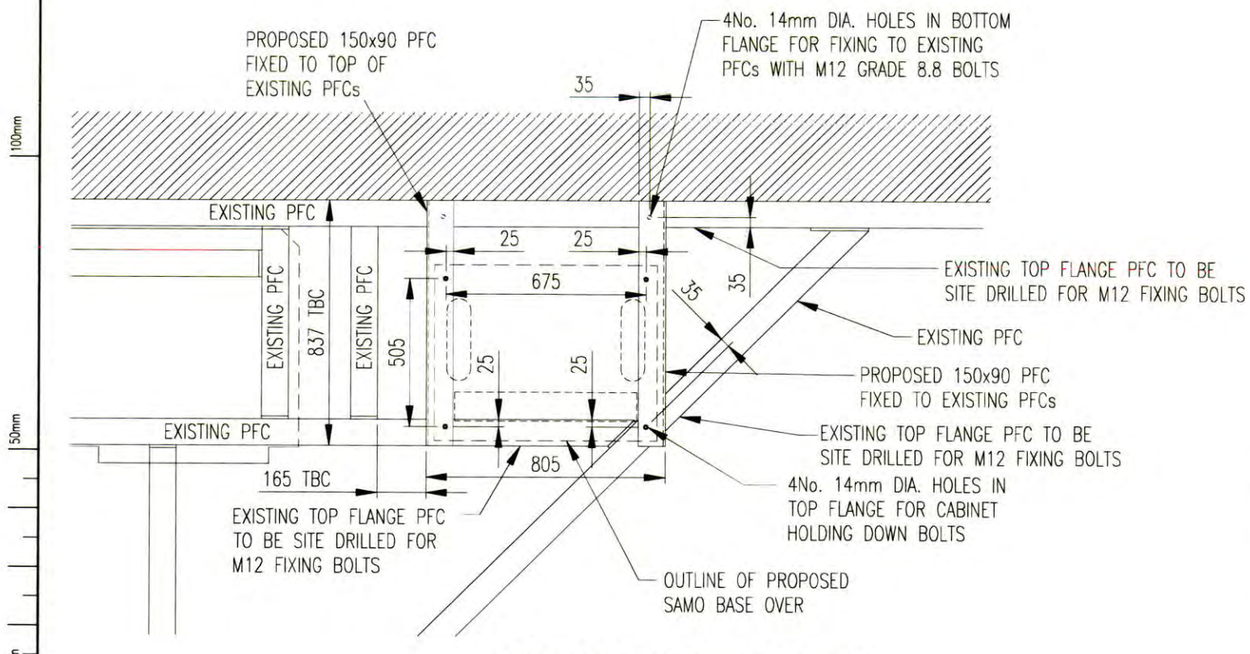

CONSTRUCTION DETAILS

SCALE 1:20

A3

ELECTRICAL NOTES

1. THIS DRAWING TO BE READ IN CONJUNCTION WITH THE RELEVANT CONTRACT DOCUMENTATION AND DRAWINGS
2. THE LIGHTNING PROTECTION SHALL PROVIDE A MAXIMUM RESISTANCE OF 10 OHMS.
3. THE LIGHTNING PROTECTION INSTALLATION SHALL COMPLY IN FULL WITH BS 6651 : 1990.
4. THE EARTHING INSTALLATION SHALL COMPLY IN FULL WITH BS 7430, 1998.
5. MECHANICAL, ELECTRICAL, EARTHING & LIGHTNING PROTECTION SERVICES SHALL ALL BE INSTALLED IN ACCORDANCE WITH THE DESIGN GUIDE
6. EARTH PIT INSTALLATIONS SHALL BE A MINIMUM OF 3m APART.
7. ON COMPLETION OF THE ELECTRICAL WORKS, TEST CERTIFICATES SHALL BE PROVIDED FOR THE FOLLOWING :
   i) ELECTRICAL INSTALLATION
   ii) LIGHTNING PROTECTION SYSTEM
8. THE ELECTRICAL INSTALLATION SHALL COMPLY IN FULL WITH BS 7671 : 2008.

EARTHING/LP DETAILS:

EARTH STUDS ON THE LINK A/C, RBS2106 CABINET AND FLEXI PLINTH TO BE CONNECTED TO GRILLAGE STEEL USING 25X3 PVC COATED COPPER EARTH TAPE.

ANTENNA SUPPORT POLES AND ENDS OF ALL CABLE TRAY RUNS TO BE CONNECTED TO EXISTING L/P SYSTEM ON ROOF USING 25X3 PVC COATED COPPER EARTH TAPE.

THE L/P SYSTEM IS TO BE TESTED TO ENSURE IT COMPLIES WITH THE SPECIFICATION. IE 10 OHMS MAX RES

NOTE: CONTRACTOR TO INSTALL NEW 40A TYPE C BREAKER (MAKE OF BREAKER MUST MATCH MAKE OF D/B) WITHIN THE D/B FOR THE NEW SAMO POWER SUPPLY, SUITABLE ROTARY ISOLATOR ADJACENT CABINET AND ALL SUB MAINS, POWER SUPPLY CABLES, TRANSMISSION CABLES, ALARM CABLES ETC. TO THE CABINETS AS NECESSARY TO COMPLY WITH THE DESIGN GUIDE.

ALL NECESSARY CERTIFICATION TO BE PROVIDED BY THE CONTRACTOR AT THE END OF THE CONSTRUCTION PERIOD IN ACCORDANCE WITH THE DESIGN GUIDE INCLUDING, AS BUILT DRAWINGS AND PHOTO'S, 17TH EDITION, L/P CERT, DUCT CERT, RET AND ANT. DETAILS, RIGGING RESULTS, ETC.

THE CONTRACTOR IS TO PROVIDE PHOTOGRAPHIC EVIDENCE OF THE PARAGRAPH 18 NOTICE FOR THE HANDOVER DOCUMENTATION ON COMPLETION.

STEELWORK NOTES

1. ALL MATERIALS AND WORKMANSHIP TO BE IN ACCORDANCE WITH BS 5950. THE STRUCTURAL USE OF STEELWORK IN BUILDINGS.
2. STRUCTURAL STEELWORK SECTIONS TO BE GRADE S275 STEEL IN ACCORDANCE WITH BS EN 10025.
3. BOLTS TO BE GRADE 8.8 UNLESS NOTED OTHERWISE.
4. WELDS TO BE 6mm CONTINUOUS FILLET, UNLESS NOTED OTHERWISE.
5. CONTRACTOR MUST VERIFY ALL DIMENSIONS ON SITE BEFORE COMMENCING ANY WORK OR MAKING ANY SHOP DRAWINGS. NO DIMENSIONS TO BE SCALED FROM DRAWINGS. DISCREPANCIES MUST BE REPORTED TO THE ENGINEER PRIOR TO PROCEEDING.
6. ALL STEELWORK IS TO BE BLAST CLEANED TO SA2.5, AND HOT DIPPED GALVANIZED TO A THICKNESS OF 140 MICRONS IN ACCORDANCE WITH BS 729.
7. GALVANIZED NUTS AND BOLTS TO BE USED (U.O.N.).
8. STEELWORK WHICH HAS BEEN DAMAGED ON SITE TO BE TOUCHED UP, WITH COLD GALVANIZING (GALVAFROID OR SIMILAR APPROVED) AND ONLY TO THE ENGINEERS APPROVAL.
9. BOLTED CONNECTIONS TO HAVE A MINIMUM CONNECTION OF 2No M16 BOLTS, UNLESS NOTED OTHERWISE.
10. FABRICATION DRAWINGS ARE TO BE SUBMITTED TO W.H.P. PRIOR TO MANUFACTURE OF STEELWORK.
11. NEW OPEN MESH GRATING TO BE LIONWELD KENNEDY W100 TYPE WITH 25x3 THK BEARING BARS (GALVANISED).
12. ALL TEMPORARY ERECTION BRACINGS & LIFTING POINTS TO BE PROVIDED BY THE STEELWORK CONTRACTOR PRIOR TO LIFTING & ERECTION.
13. ALL RESIN ANCHORS TO BE TESTED IN ACCORDANCE WITH MANUFACTURERS RECOMENDATIONS TO 5KN PULLOUT FORCE.
14. TEST CERTIFICATION TO BE PROVIDED FOR ALL RESIN ANCHOR FIXINGS & FORWARDED TO ENGINEER FOR INCLUSION IN THE HANDOVER DOCUMENTATION.

No.	Revision	Date	By	ckd
A1	PRELIMINARY ISSUE FOR COMMENT	30/04/13	I.P.	REM

MBNL
6 Anglo Office Park
67 White Lion Road
Amersham
HP7 9FB
Tel: 01494 762 923
Email: info@mbnl.co.uk

WHP Wilkinson Helsby
Connaught House, Park View,
Lofthouse Gate, Wakefield
WF3 3HA
Tel: 01924 876777 Fax: 01924 876778
e-mail: info@wilkinson-helsby.co.uk

Site Name & Address:
INTERNATIONAL HOUSE
82-86 DEANSGATE
MANCHESTER, M3 2ER

Title:
PROPOSED TELECOMMUNICATIONS ROOFTOP UPGRADE CONSTRUCTION DETAILS

Purpose of Issue:
APPROVAL

Drawing No:
56017 - 07

Cell No: 56017
Site No: 919661

Issue:	Scale:	Drn:	Date:	Ch'd:	Date:	App:	Date:
A1	AS STATED	I.P.	19.04.13	REM	30.04.13	MSH	30.04.13