CONSTRUCTION DETAILS FENCE D & F
900 high fence & gate

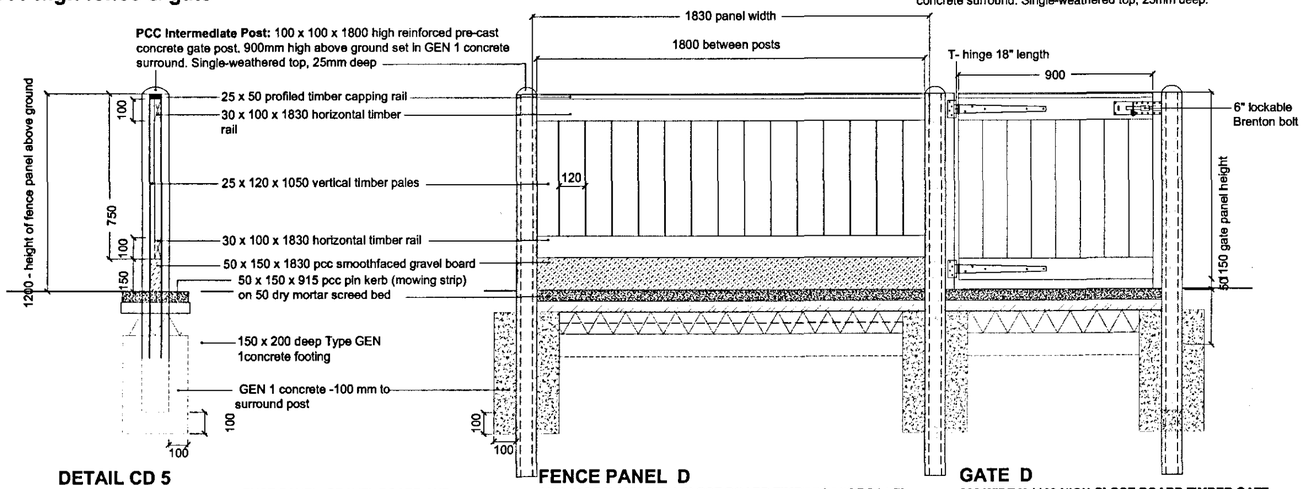

DETAIL CD 5
TYPICAL SECTION THROUGH FENCE PANEL, GRAVEL BOARD AND MOWING STRIP

FENCE PANEL D
1830 WIDE X 1050 HIGH CLOSE BOARD TIMBER FENCE PANEL
15nr 120 x 25 x 1025 timber pales spaced evenly across width of panel. 2nr100 x 200 x 1830 horizontal rails. 2000 high above ground

GATE D
900 WIDE X 1100 HIGH CLOSE BOARD TIMBER GATE
8nr 120 x 25 x 1025 timber pales spaced evenly across width of panel. 2nr 100 x 20 x 1830 horizontal rails. 2000 high above ground

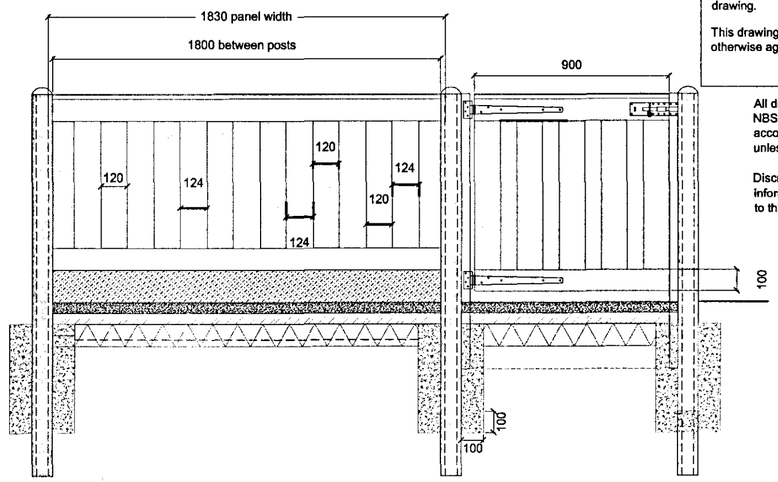

FENCE PANEL F
1830 WIDE X 1750 HIGH TIMBER PALISADE FENCE PANEL
8nr 120 x 25 timber pales spaced evenly across width of panel.
2nr 100 x 20 x 1830 horizontal rails. 2000 high above ground

GATE F
900 WIDE X 1150 HIGH CLOSE BOARD TIMBER GATE
5nr 120 x 25 x 1125 timber pales spaced evenly across width of panel. 2000 high above ground

All dimensions to be checked on site.
Figured dimensions to be read in preference to scaled.

BCA accepts no responsibilty for any unauthorised amendments to the drawing and does not permit unauthorised copying of the drawing.

This drawing is copyright and remains the property of BCA unless otherwise agreed.

All drawings to be read in conjunction with the Landscape NBS Specification and all works to be carried out in accordance with latest British Standards/codes of practice unless specifically directed otherwise.

Discrepancies and/or ambiguities between this drawing and information given elsewhere must be reported immediately to this office for clarification before proceeding.

CONSTRUCTION DETAILS FENCE E
1800 high fence & gate

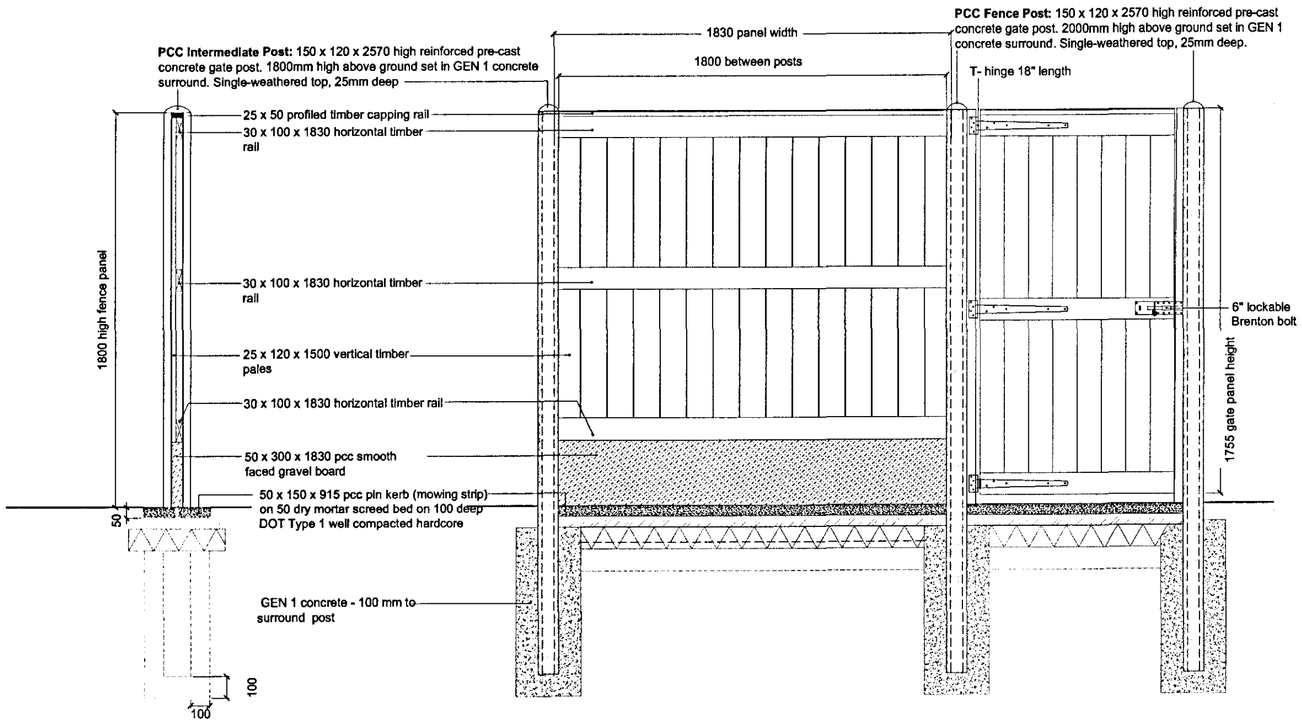

DETAIL CD 10
TYPICAL SECTION THROUGH FENCE PANEL AND MOWING STRIP

FENCE PANEL E
1830 WIDE X 1800 HIGH CLOSE BOARD TIMBER FENCE PANEL
15nr 120 x 25 x 1800 timber pales spaced evenly across width of panel. 3nr100 x 200 x 1830 horizontal rails. 1800 high above ground

GATE E
900 WIDE X 1800 HIGH CLOSE BOARD TIMBER GATE
8nr 120 x 25 x 1755 timber pales spaced evenly across width of panel. 3nr 100 x 20 x 900 horizontal rails. 1800 high above ground

TYPICAL SECTION

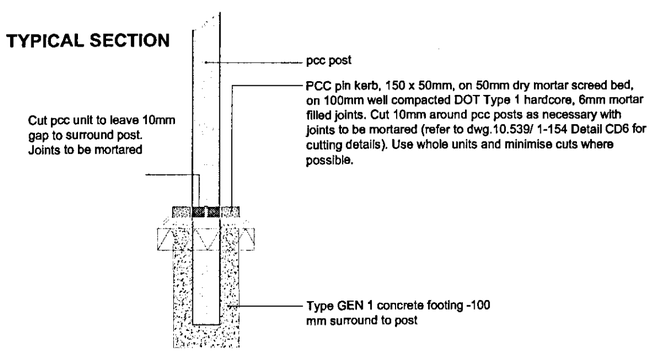

DETAIL CD 11 - typical section through pcc post

TYPICAL PLAN

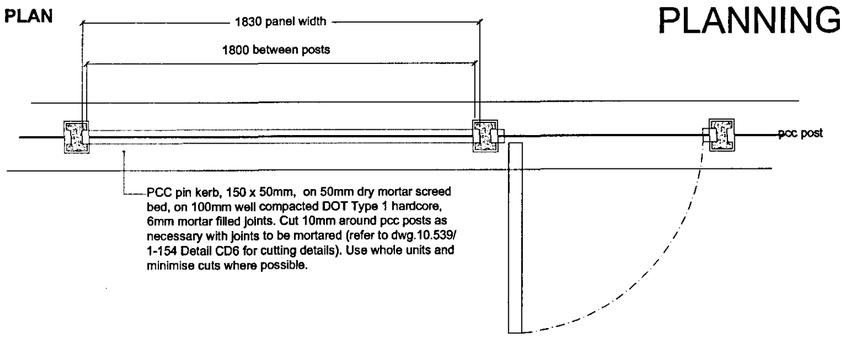

PLANNING ISSUE

SURFACE FINISH NOTES
All new boundaries to be painted to tenant's choice. Surface finishes to be by **Jotun / Dulux** or similar approved.

- New and existing timber to have 1 coat **Jotun Butinox 3 Opaque** stain only
- Metal surfaces to be coated with **Dulux Metalsheild primer** and 2 coats **Dulux Metalsheild gloss.**

Rev	Date	Revisions	Initials
A	Aug 2011	Update in accordance with final tender reductions and issued as Construction Issue	DW

Client	CITY SOUTH MANCHESTER	Scale	Drawn	Checked	Date
		1:20@A2	HR	MOC	14.03.2011
Job title	ENVIRONMENTAL IMPROVEMENTS - BETHNALL DRIVE	Job number	Drawing number		Rev
Drawing title	BOUNDARY DETAILS 3 -TIMBER FENCES	10.539	1-153		A

City South Manchester Ref: cs35935

BCA Landscape
19 OLD HALL STREET
LIVERPOOL
L3 9JQ
TELEPHONE +44 (0)151 242 8161
FACSIMILE +44 (0)151 236 4467
EMAIL office@bcalandscape.co.uk
WEB SITE www.bcalandscape.co.uk