Do not scale off this drawing. All discrepancies to be reported to Portakabin Limited.

Portakabin **Portaloo®**

Portaloo 101 (type A)
Standard Specification Drawing

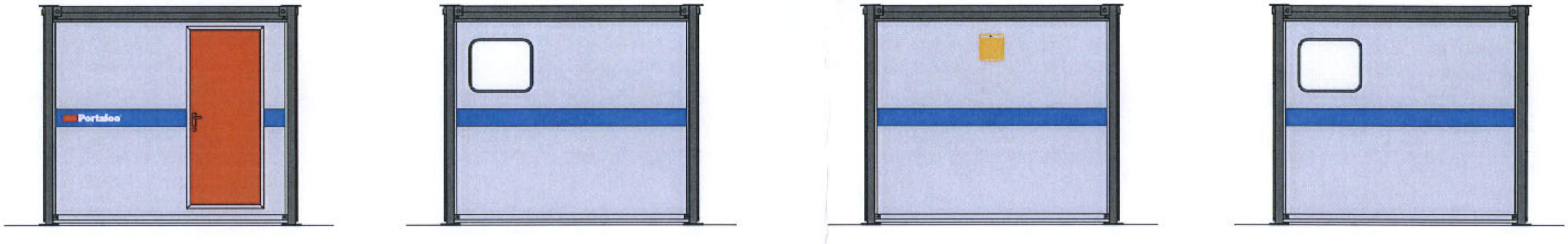

Elevations

LEGEND

- LIGHT SWITCH (ONE WAY)
- CEILING MOUNTED PULL SWITCH
- CONSORT 2KW HIGH LEVEL FAN HEATER C/W FUSED SPUR
- 150MM GX6T VENT AXIA WALL MOUNTED EXTRACT FAN
- FROST STAT C/W GUARD
- 3 POLE FAN ISOLATOR SWITCH
- CROMPTON 150MM BATTEN FITTING C/W OPAL DIFFUSER
- 25 LITRE ELSON PEARL WATER HEATER
- 50 LITRE ELSON PEARL WATER HEATER
- 3kW REDRING OVERSINK WATER HEATER

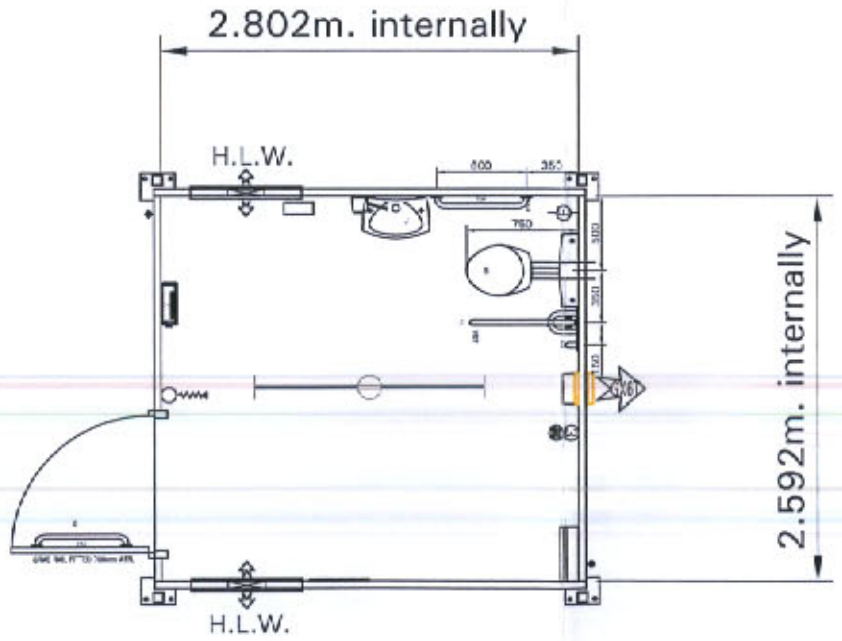

Plan

PLANS
ACK'D
REPLIED
RECD 20 FEB 2006
M
M
M
FOR ACTION

Portakabin
Quality - this time - next time - every time

Paton Plant Limited Whistleberry Road Hamilton Lanarkshire ML3 0EJ
Telephone 01698 429414 Fax 01698 459499

PL101-A

©Portakabin Limited 2000 This drawing is the property of Portakabin Limited, it must not be copied or reproduced or divulged to anyone without written permission.

PL
ACK'D
REPLIED
RECD 20 FEB 2008
INITIAL
INITIAL
INITIAL
FOR ACTION

Portakabin **Portaloo®**

PL101 (Type A)
Disabled persons toilet unit

Complete self-contained disabled persons toilet accommodation. Service installation, heating, lighting, ventilation and insulation comply with all necessary regulations and performance criteria.

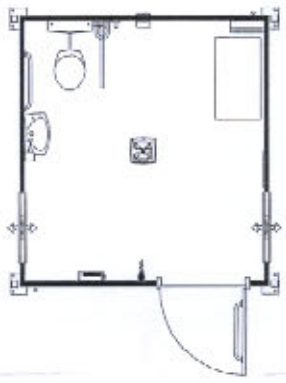

Plumbing connections
- Water 15mm (factory tested to 40 PSI)
- Waste 110mm

Electrical loading
- Single phase 230v
- 23 amps

Dimensions
- External length - 3084mm
- External width - 2900mm
- Internal length - 2808mm
- Internal width - 2592mm
- Leg centres (length) - 2854mm
- Leg centres (width) - 2810mm

Exterior Doors	
• Steel faced , insulated, outward opening with mortice lock, lever handle and door closer, 926 wide x 2040 high (colour Red)	1 Nr
Windows	
• Horizontal sliding, obscure single glazed 750 wide x 500 high	2 Nr
• Window guards 750wide x 500 high	2 Nr
Ventilation	
• Standard high level vents	2 Nr
Floor	
• Vinyl to base throughout	8.94m²
W.C. Area	
• Disable W.C.	1 Nr
• Disabled wash hand basin (small)	1 Nr
• 3kw water heater (auto sensor)	1 Nr
• Drainage connection through wall	
Heating, Lighting and Electrical	
• Extractor fan 100mm	1 Nr
• Froststat	1 Nr
• High level heater 2kw	1 Nr
• Ceiling mounted pull switch one way	1 Nr
• Consumer unit (single phase)	1 Nr
• Flourescent light (2d Flourescent)	1 Nr
Fitting out	
• Disabled pictogram	1 Nr
• Mirrors	2 Nr
• Disabled grabrails	1 set
• Disabled backboards	1 set
• Mircoburst air freshener	1 Nr
• Mini jumbo dispenser	1 Nr
• Soap dispenser	1 Nr
• Medium bin	1 Nr
• Hand towel dispenser	1 Nr
• Baby minder changing unit c/w backboard	1 Nr
• Hat and coat hook	1 Nr
• 75mm Black coved skirting throughout	
• Portaloo labels	1 set

Not scaled

In accordance with our policy of continuous development and Product improvement we reserve the right to make changes in design and specification without notice.

Portakabin
quality - this time - next time - every time

® Portakabin Limited 09/04/04