ALL DIMENSIONS ARE IN METRES

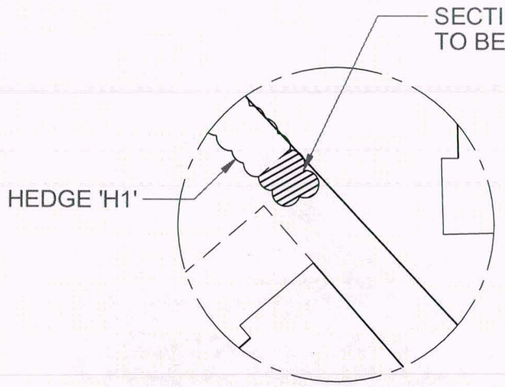

DETAIL 'A'

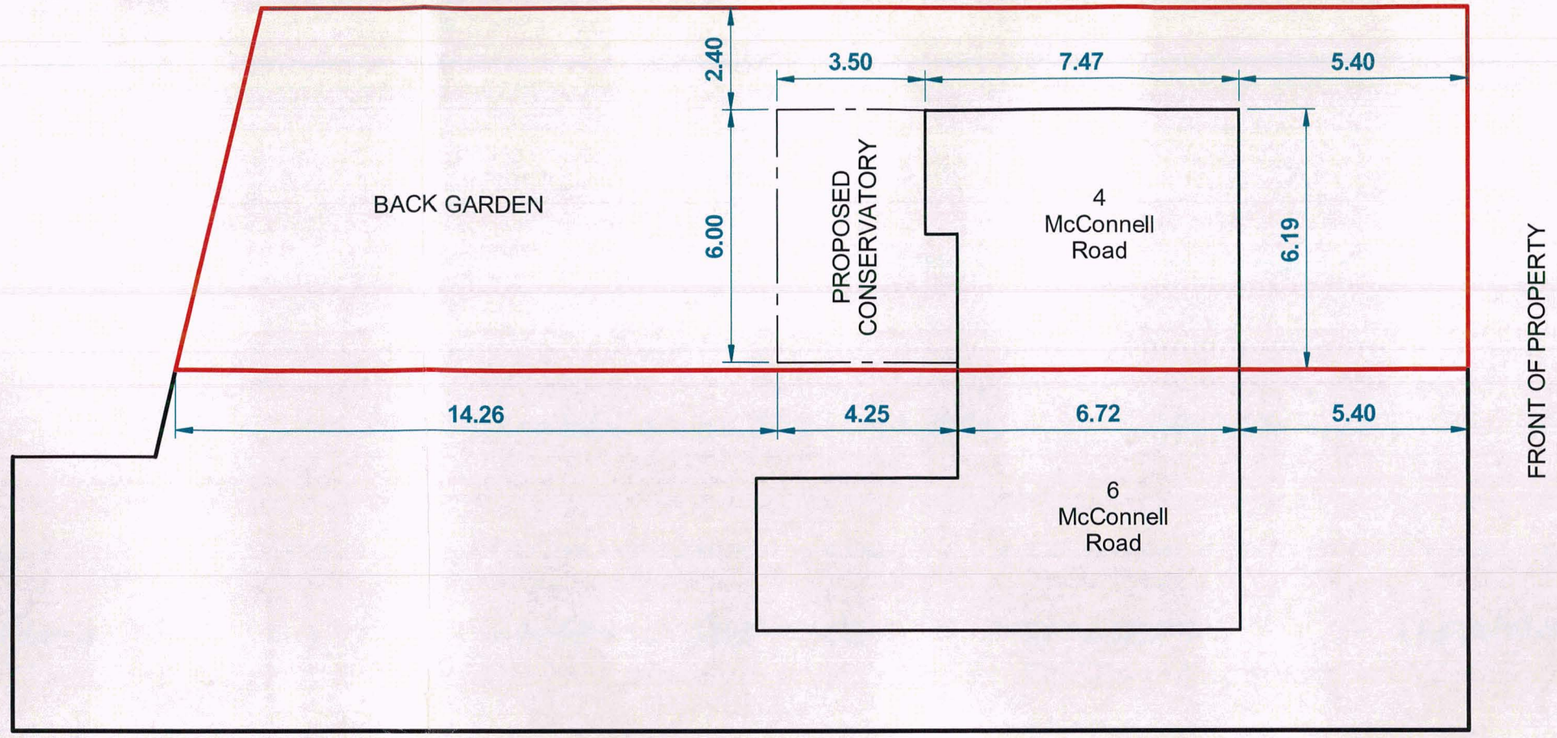

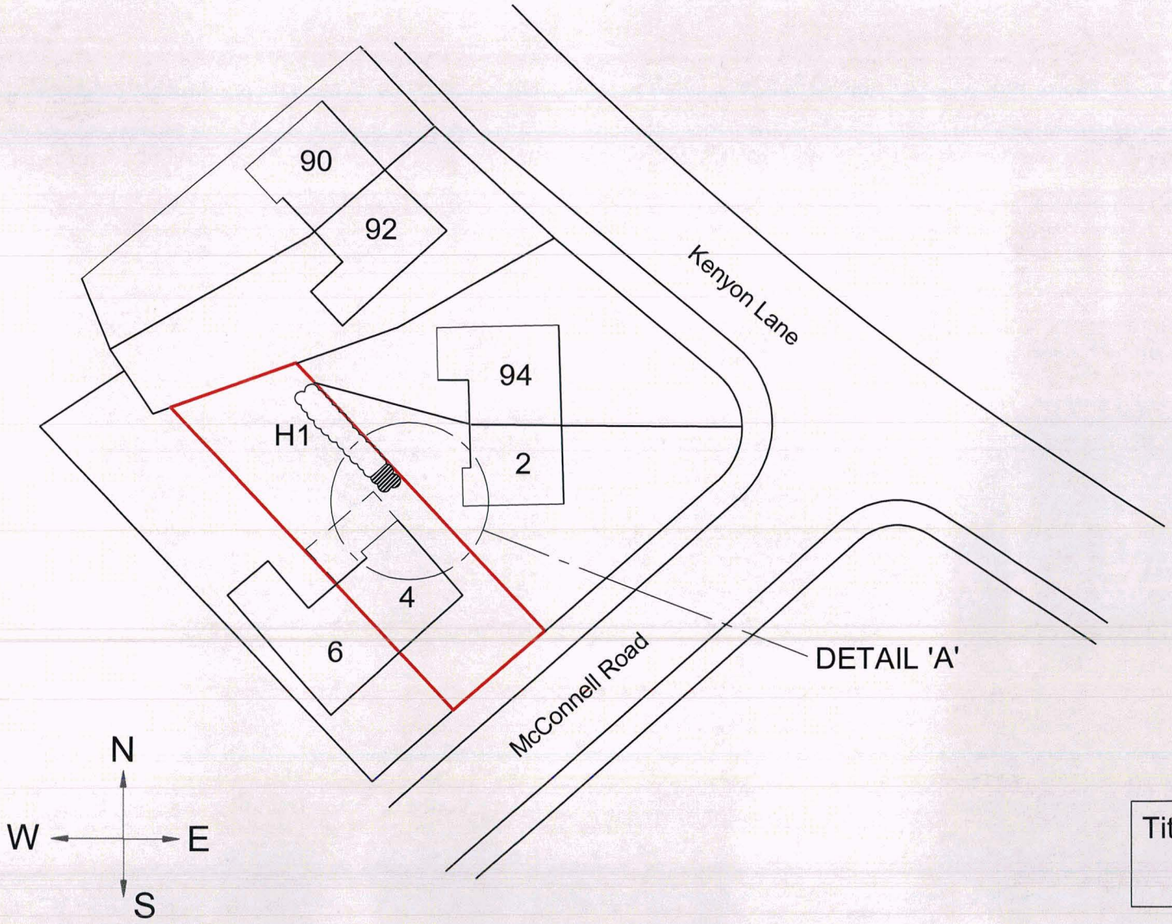

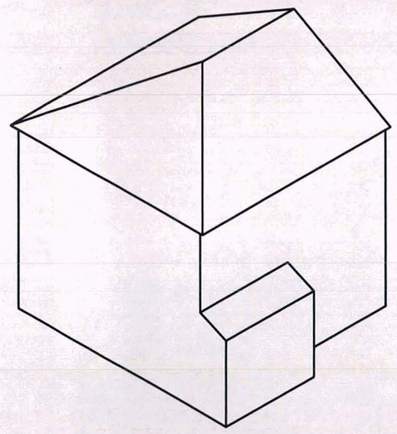

EXISTING

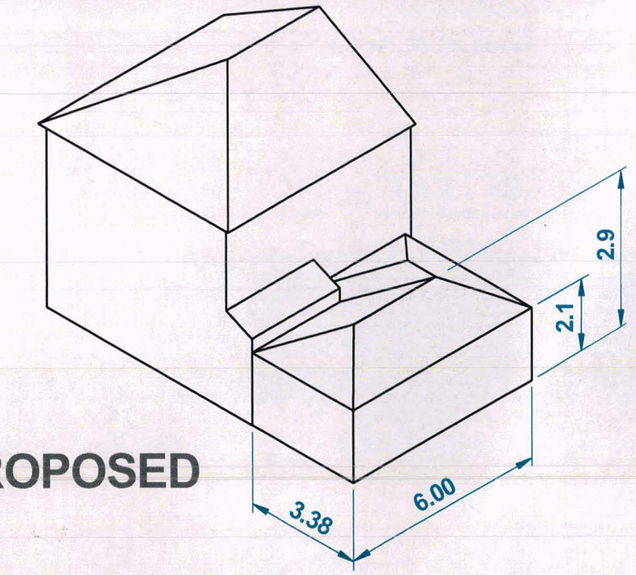

PROPOSED

Title	Conservatory Planning Permission Application	Drawing No. 4MCCONNELL/001	Date 17/5/12